This is a digital copy of a book that was preserved for generations on library shelves before it was carefully scanned by Google as part of a project to make the world's books discoverable online.

It has survived long enough for the copyright to expire and the book to enter the public domain. A public domain book is one that was never subject to copyright or whose legal copyright term has expired. Whether a book is in the public domain may vary country to country. Public domain books are our gateways to the past, representing a wealth of history, culture and knowledge that's often difficult to discover.

Marks, notations and other marginalia present in the original volume will appear in this file - a reminder of this book's long journey from the publisher to a library and finally to you.

Usage guidelines

Google is proud to partner with libraries to digitize public domain materials and make them widely accessible. Public domain books belong to the public and we are merely their custodians. Nevertheless, this work is expensive, so in order to keep providing this resource, we have taken steps to prevent abuse by commercial parties, including placing technical restrictions on automated querying.

We also ask that you:

+ *Make non-commercial use of the files* We designed Google Book Search for use by individuals, and we request that you use these files for personal, non-commercial purposes.
+ *Refrain from automated querying* Do not send automated queries of any sort to Google's system: If you are conducting research on machine translation, optical character recognition or other areas where access to a large amount of text is helpful, please contact us. We encourage the use of public domain materials for these purposes and may be able to help.
+ *Maintain attribution* The Google "watermark" you see on each file is essential for informing people about this project and helping them find additional materials through Google Book Search. Please do not remove it.
+ *Keep it legal* Whatever your use, remember that you are responsible for ensuring that what you are doing is legal. Do not assume that just because we believe a book is in the public domain for users in the United States, that the work is also in the public domain for users in other countries. Whether a book is still in copyright varies from country to country, and we can't offer guidance on whether any specific use of any specific book is allowed. Please do not assume that a book's appearance in Google Book Search means it can be used in any manner anywhere in the world. Copyright infringement liability can be quite severe.

About Google Book Search

Google's mission is to organize the world's information and to make it universally accessible and useful. Google Book Search helps readers discover the world's books while helping authors and publishers reach new audiences. You can search through the full text of this book on the web at `http://books.google.com/`

Soc 3412.1.20

Harvard College Library

FROM

Rufus R. Wade,
Boston.

9 May, 1899.

Digitized by Google

JAN 13 1889

Eliot Spalding.

JAN 13 1889

Digitized by Google

Digitized by Google

PUBLIC DOCUMENT . . . . . No. 32.

REPORT OF THE CHIEF

OF THE

MASSACHUSETTS DISTRICT POLICE,

FOR THE

YEAR ENDING DECEMBER 31, 1898,

INCLUDING

THE INSPECTION DEPARTMENT AND THE DETECTIVE DEPARTMENT.

BOSTON:
WRIGHT & POTTER PRINTING CO., STATE PRINTERS,
18 POST OFFICE SQUARE.
1899.

Digitized by Google

cd. Loc 3412.1.20

Rufus R. Wade,
Boston.

Digitized by Google

Commonwealth of Massachusetts.

OFFICE OF THE CHIEF OF THE DISTRICT POLICE,
BOSTON, Jan. 1, 1898.

To His Excellency ROGER WOLCOTT, *Governor of the Commonwealth.*

GOVERNOR: — I have the honor to submit a report of the duties performed by the district police for the year ending Dec. 31, 1898.

Very respectfully, your obedient servant,

RUFUS R. WADE,
Chief of District Police.

Digitized by Google

Digitized by Google

Commonwealth of Massachusetts.

REPORT.

The Public Statutes of the Commonwealth, which prescribe the powers and duties of the Massachusetts District Police, require that the chief of the district police shall report in print to the governor on or before the first day of January of each year, in relation to factories and public buildings, with such remarks, suggestions and recommendations as he may deem necessary. Therefore, in conformity with the requirements of law, I herewith respectfully submit to Your Excellency a detailed statement of the official work of this department for the year just ended, which statement constitutes my twentieth annual report.

One of the most prominent sources of satisfaction which I have recognized as chief of the department has been the uniform fidelity and efficiency of the force. The district attorneys and other officials with whom, pursuant to law, my officers have co-operated, have frequently taken occasion to compliment the members of this force detailed for special duties, and it is a source of pride to us all that the high character which the Commonwealth expects of all her officials has not been lacking in this department. The cordial and earnest support rendered to me in the most loyal spirit deserves a word of recognition in this report.

As a matter of record, I will state that the entire number of the district police is forty-nine. This includes the appointment of four additional members of the boiler inspection department, qualified to act as examiners of engineers and firemen and as inspectors of boilers, as provided for by chapter 261, Acts of 1898.

Digitized by Google

The increase of the business of this office requiring more clerical assistance, authority was granted to me by chapter 219 of said Acts to appoint in my office an additional clerk for service in the boiler inspection department of the district police, at a salary of six hundred dollars a year, the said sum to be paid out of the proceeds of the fees received for examinations of applicants for licenses as engineers and for inspections of boilers.

Additional Copies of Annual Report.

So many applications from proper sources, occasionally from foreign countries, have been made for copies of the annual report of this department, that the numbers of the edition usually issued have fallen far short of the demand. By chapter 320 of the Acts of 1898, relative to the printing of certain public documents, it is provided that there shall be printed annually, of the report of the chief of the district police, twenty-five hundred copies.

The Inspection Department.

When the district police force was constituted, it was provided that two or more of their number should be appointed as inspectors of factories and public buildings, to enforce the provisions of the law relating to the safe guarding of machinery, to fire-escapes, hatchways and elevators, also the employment of women and minors in manufacturing and mechanical establishments. Important as these duties are, and requiring, as they must always do, the constant exercise of trained and experienced service, the Legislature at succeeding sessions has added much to their number.

Among the most prominent are included the enforcement of the laws regarding ventilation and sanitary provisions in factories, workshops, school-houses and public buildings; reports of accidents; the preservation of health of females employed in manufacturing, mechanical and mercantile establishments; inspection of tenement houses; inspection of boilers, and the examination for license of persons desiring certificates as engineers and firemen in charge of the same. A mere renumeration of these later provisions of law affords some idea of the intelligent interest

Digitized by Google

which the Commonwealth has taken in its industrial population, and its determination to secure their right to the best possible conditions of life.

It is in the interest of public order and morals, as well as of public health, that men and women, also children, shall do labor as free as possible from all influences that contaminate mind and body. Physical health and comfort are indispensable to industrial prosperity.

The Law in relation to the Employment of Children, and Provisions for their Education and Protection.

The central feature of all the laws which have been enacted in our State for the protection of child labor in factories, mercantile and other establishments is the provision for compulsory education.

No child under fourteen years of age shall be employed in any factory, workshop or mercantile establishment. No such child shall be employed in any work performed for wages or other compensation, to whomsoever payable, during the hours when the public schools of the town or city in which he resides are in session, nor be employed at any work before the hour of six o'clock in the morning or after the hour of seven o'clock in the evening.

No person shall employ any minor over fourteen years of age, and no parent, guardian or custodian shall permit to be employed any such minor under his control, who cannot read at sight and write legibly simple sentences in the English language, while a public evening school is maintained in the town or city in which such minor resides, unless such minor is a regular attendant at such evening school or at a day school: *provided*, that upon presentation by such minor of a certificate signed by a regular practising physician, and satisfactory to the superintendent of schools, or, where there is no superintendent of schools, the school committee, showing that the physical condition of such minor would render such attendance in addition to daily labor prejudicial to his health, said superintendent of schools or school committee shall issue a permit authorizing the employment of such minor for such period as said superintendent of schools or school committee may determine. Said superintendent of schools or school committee, or teachers acting under authority thereof, may excuse any absence from such evening school arising from justifiable cause. Any per-

Digitized by Google

son who employs a minor in violation of the provisions of this section shall forfeit for each offence not more than one hundred dollars for the use of the evening schools of such town or city. Any parent, guardian or custodian who permits to be employed any minor under his control in violation of the provisions of this section shall forfeit not more than twenty dollars for the use of the evening schools of such town or city.

A vast amount of theorizing has been indulged in, in the attempt to show that such laws are unwarranted interference with the rights of parents to control the time and receive the earnings of their children. That contention, however, has long since been generally abandoned. The welfare of the child cannot be sacrificed to the ill-advised, short-sighted demands of parents, who for their own apparent benefit would doom their children to a life of toil and ignorance.

In the practical operation of the law relating to child labor occasional instances of hardship have been discovered, such as the loss to a widowed mother of the small amount which her child might earn if the provisions relating to age and schooling could be waived. It has been said that some discretion should be allowed the inspectors of the district police, which would enable them to nullify the law in exceptional cases, such as the one supposed.

My view of the duty as it regards the enforcement of these or any other laws is that, while good judgment and discretion ought always to be employed, the whole fabric of legal protection to child labor would be undermined if the enforcement of these laws were left to the discretion of the inspectors. Taking the larger view of the subject, individual cases of hardships must be dealt with as they occur by suitable measures which do not involve the nullification of the labor laws of the State. Meanwhile, there must be no weakening of the law. The high standing existing here must be maintained, not only for the sake of our own child workers, but because Massachusetts is the leader in industrial reform to which other States are turning for enlightenment and guidance.

The radical changes in the methods of production that have been inaugurated within the memory of men now living, the evolution from crude and primitive manufacturing conditions,

Digitized by Google

made inevitable the introduction of the cheapest obtainable labor, which was that of women and children. The increase of manufacturing establishments, the use of machinery, increasing to meet the demands made by the sub-division of work for economic and other reasons, have paved the way for unskilled labor, which is necessarily poorly paid. Much of the work done by women, and especially by children, requires chiefly the exercise of attention, and gives no scope to the mind, and therefore soon becomes monotonous.

The legal restrictions as to the age of child workers, the strict requirements as to the kind and amount of schooling which must be secured before the certificate of permission is granted, have done much to improve the condition which generally prevailed. Compulsory education of this class especially has been of marked benefit, as it enables them to obtain the rudiments of education at the most favorable period in their lives for such purposes. In Massachusetts the settled policy is that education and labor must go hand in hand. No child shall be brought up with the idea that his life is devoted to labor alone; that he is debarred from all schooling as soon as he can get into a shop or factory, while other children more favored obtain the best education that our public schools can furnish. If children are to continue in such employment, provision must be likewise made for their education. It is for no one's advantage that it should be otherwise, and it ought in justice to be said that with rarest exceptions the employer of the child insists, as preliminary to employment, that he shall produce the prescribed certificate of schooling.

The Evils of the Sweating System.

It is within the remembrance of many when a comparatively new method began to prevail extensively in Boston and some of the larger towns and cities outside the metropolis in connection with the manufacture of the cheaper grades of clothing. The contract system of doing such work was greatly developed by excessive competition.

Boston, once the leading city of the clothing industry, at present holds the fourth place, New York, Chicago and Rochester superseding her. To attempt to give the reason

Digitized by Google

why would evolve a discussion too lengthy and complicated to be feasible. From statements secured from our large wholesale clothing merchants, however, it appears that not only is Boston losing in the amount of clothing manufactured within her borders, but so also are our country towns and villages throughout New England, and New York city is reaping the benefit. While each dealer's reports differ as to the per cent. made in Boston, New York and the country, yet by comparing them it is very nearly accurate to place the amount made of men's clothing in Boston at 50 per cent., in New York 30 per cent. and in New England 20 per cent. Of boys' and children's clothing, 75 per cent. is made in New York, and the other 25 per cent. about equally divided between Boston and the country. This shows an increase in the amount of New York work; and, also, where formerly only the cheapest grade of goods was sent there, now much of the finer grades are being sent. While various reasons are given for this increase, the only fair one to be deducted is that the work is sent there simply because it is made cheaper.

That a city like Boston, protected by a sweating law that guarantees very nearly perfect safety from contagious disease in the clothing made here, should be gradually losing its trade in favor of less protected cities, can only be remedied by either National or State laws strong enough to make it impossible for any class of people to work and exist on starvation wages and under such unhealthy conditions.

There is little in the method of doing this work by contract and letting it out to sub-contractors that calls for criticism, except in the scramble which invites contracts for very low wages. The poorest of the poor among these garment workers in the struggle for existence feel obliged to accept wages that are but little above starvation rates. The expenses for lights, rent, fuel and helpers must be the lowest possible, in order that some slight profit may accrue. Is it not strange that men are found to do this work, who succeed only by sweating the life blood out of those who are compelled to labor under the worst conditions. The work is most frequently done by the piece, and, as a consequence, the hours of labor are wholly unrestricted, running in many places far into the night. The family eat, sleep and per-

Digitized by Google

form the functions of life in the same apartments in which the work is done.

Some five years ago vigorous attempts at improvement were made, through legislation requiring the issuing of licenses to those who wanted to work at home in the manufacture of clothing; and the restrictive features of the law were rigidly enforced by the inspectors. Experience in such enforcements disclosed the necessity of making some changes in the statute, and the Legislature, in the Acts of 1898, enacted the following: —

[CHAPTER 508, ACTS OF 1894, SECTIONS 44, 45, 46, 47, 48, 63 AND 76, AS AMENDED BY CHAPTER 150, ACTS OF 1898.]

AN ACT RELATING TO THE MANUFACTURE AND SALE OF CLOTHING MADE IN UNHEALTHY PLACES.

SECTION 44. No room or apartment in any tenement or dwelling house shall be used for the purpose of making, altering, repairing or finishing therein any coats, vests, trousers or wearing apparel of any description whatsoever, except by the members of the family dwelling therein, and any family desiring to do the work of making, altering, repairing or finishing any coats, vests, trousers or wearing apparel of any description whatsoever in any room or apartment in any tenement or dwelling house shall first procure a license, approved by the chief of the district police, to do such work as aforesaid. A license may be applied for by and issued to any one member of any family desiring to do such work. No person, partnership or corporation, shall hire, employ or contract with any member of a family not holding a license therefor, to make, alter, repair or finish any garments or articles of wearing apparel as aforesaid, in any room or apartment in any tenement or dwelling house as aforesaid. Every room or apartment in which any garments or articles of wearing apparel are made, altered, repaired or finished, shall be kept in a cleanly condition and shall be subject to the inspection and examination of the inspectors of the district police, for the purpose of ascertaining whether said garments or articles of wearing apparel or any part or parts thereof are clean and free from vermin and every matter of an infectious or contagious nature. A room or apartment in any tenement or dwelling house which is not used for living or sleeping purposes, and which is not connected with any room or apartment used for living or sleeping purposes, and which has a separate and distinct entrance from the outside, shall not be subject to the provisions of this act. Nor shall anything in this act be so construed as to

Digitized by Google

prevent the employment of a tailor or seamstress by any person or family for the making of wearing apparel for such person's or family's use.

SECTION 45. If said inspector finds evidence of infectious disease present in any workshop or in any room or apartment in any tenement or dwelling house in which any garments or articles of wearing apparel are made, altered or repaired, or in goods manufactured or in the process of manufacture therein, he shall report the same to the chief of the district police, who shall then notify the local board of health to examine said workshop or any room or apartment in any tenement or dwelling house in which any garments or articles of wearing apparel are made, altered or repaired, and the materials used therein; and if said board shall find said workshop or tenement or dwelling house in an unhealthy condition, or the clothing and materials used therein unfit for use, said board shall issue such order or orders as the public safety may require.

SECTION 46. Whenever it is reported to said inspector or to the chief of the district police, or to the state board of health or to either of them, that ready-made coats, vests, trousers, overcoats or other garments are being shipped to this Commonwealth, having previously been manufactured in whole or in part under unhealthy conditions, said inspector shall examine said goods and the condition of their manufacture, and if upon such examination said goods or any of them are found to contain vermin or to have been made in improper places or under unhealthy conditions, he shall make report thereof to the state board of health, which board shall thereupon make such order or orders as the public safety may require.

SECTION 47. Whoever sells or exposes for sale any coats, vests, trousers or any wearing apparel of any description whatsoever which have been made in a tenement or dwelling house in which the family dwelling therein has not procured a license, as specified in section forty-four of this act, shall have affixed to each of said garments a tag or label not less than two inches in length and one inch in width, upon which shall be legibly printed or written the words "tenement made," and the name of the state and the town or city where said garment or garments were made.

SECTION 48. No person shall sell or expose for sale any of said garments without a tag or label as aforesaid affixed thereto, nor sell or expose for sale any of said garments with a false or fraudulent tag or label, nor wilfully remove, alter or destroy any such tag or label upon any of said garments when exposed for sale.

Digitized by Google

SECTION 63. Whoever violates any of the provisions of this act relating to the manufacture and sale of clothing made in unhealthy places shall be punished by fine not exceeding one hundred dollars and not less than fifty dollars.

SECTION 76. Any person, firm or corporation violating the provisions of sections forty-four to forty-eight inclusive of this act, shall be punished by fine not exceeding five hundred dollars and not less than fifty dollars.

The proper enforcement of this law will do much to raise the standard of living among those whom it affects, and in material ways afford them control of the conditions under which they work.

A few years ago the House of Representatives at Washington took some action looking to the thorough investigation of the so-called sweating system. A resolution was referred to the committee of manufactures, and the report thereupon was as follows: —

The sub-committee of the committee on manufactures, to whom was referred the resolutions offered by Mr. Sherman Hoar of Massachusetts, entitled, "A resolution for investigation of the so-called sweating system of tenement house labor," beg leave to report that in their judgment such an investigation ought to be held.

The so-called sweating system is a system under which, in order to save manufacturers expenses of rent, fuel, light and supervision, contractors are employed to farm out the articles to be manufactured to sub-contractors at piece prices, the work to be done by these sub-contractors at their homes, or in small workshops. This system, while it is in operation all over this country, is met with in its most vicious form principally in the large cities, in which congregate the great bulk of the lowest types of the foreign immigration. In the large cities it is alleged the sub-contractors carry on their work in the most wretched tenement-house sections employing as their assistants men and women of the lowest grade of intelligence.

The agitation of this subject on the broad field of the national Congress, and its discussions then, and since, in many of the leading journals of the country, called general attention to the gross evils of the sweating system, and resulted in wise legislation here in Massachusetts as well as in some other States.

Digitized by Google

About the time that general attention throughout the country was arrested by the report of the committee of Congress, and the discussion in the Legislatures of several of the States, and the exhaustive treatment of the sweating evil in the columns of prominent newspapers, it became apparent, upon all the testimony, that the laws of Massachusetts were very effective, and that their rigid, intelligent and impartial enforcement had resulted in suppressing the sweating system throughout the Commonwealth, and especially in Boston, where those evils had been most prevalent.

The central idea of license, bringing these people under the closest inspection of the department, requiring the observance of all sanitary laws in the places where such work was done, proved to be the most effective means of supervision and control.

One fact is clear to all who have given much attention to the evils of the sweating system. If the statutes in relation to the schooling of the children of these tenement-house workers are faithfully enforced, the natural tendency will be, to raise the standard of living. What is accomplished now by repressive measures will then be more easily brought about by the operation of natural causes. Mental training will so enlarge the horizon of these children that they will not be satisfied to live the life that held their parents in its hard grip. Motive and hope will stimulate improvements in the conditions of life. If it be true that the destruction of the poor is their poverty, ignorance will make such destruction more complete.

It is a most suggestive sight to visit that section of Boston where these contract clothing makers abound, to note the surroundings where they are employed, the homes where they abide, and the hard, persistent struggle they are making for physical existence, and then to visit the public schools in that neighborhood, where the children are obtaining free schooling, and their thirst for knowledge makes them conspicious among their schoolmates. The contrast between the stolid mentality of many of the parents and the keen alertness of the children is marked, and in a certain respect is pathetic. Does it not emphasize the saying that time is the great reformer, and that the hope of the country is less in the adult

Digitized by Google

emigrant, encrusted, as too many are, in ignorance and superstition, than in the children, alert, receptive and responsive to the noble training of our schools?

There is no better way to assimilate the vast multitudes who seek our shores from foreign parts and to some extent become a menace to our institutions than to gather their children into our educational fold, and show them a broader life than their parents can reasonably hope for.

As a matter of record, it may be confidently asserted that the evils of the sweat shop have been substantially abolished in Massachusetts, but the duty remains of incessant vigilance, to prevent their return. Besides this form of danger to public health, there is the more insidious evil of tenement-house workshops, which demands the greatest watchfulness on the part of the inspectors.

Deductions in Wages of Women and Minors.

The custom of some owners or agents of manufacturing and mechanical establishments, of deducting the wages of women and minors who were paid by the day or hour during the time the machinery was stopped, was felt by the employees to be unjust, from the fact that they were refused the privilege of leaving the factory while the machinery was being repaired. The Legislature, after hearing, passed the following act: —

[Chapter 505, Acts of 1898.]

An Act to prohibit deductions in the wages of women and minors employed in manufacturing and mechanical establishments.

Section 1. No deductions shall be made in the wages of women and minors who are paid by the day or hour, employed in manufacturing or mechanical establishments, for time during which the machinery is stopped, if said women and minors were refused the privilege of leaving the mill while the damage to said machinery was being repaired; and none of the employees referred to in this section shall be compelled to make up time lost through the breaking down of machinery unless said employees are compensated at their regular rates of wages: *provided*, that said employees have been detained within their workrooms during the time of such breakdown.

Digitized by Google

SECTION 2. Any person, corporation, officer or agent who violates the provisions of this act shall be punished by fine not exceeding twenty dollars for each offence. [*Approved June 6, 1898.*

THE INTERNATIONAL ASSOCIATION OF FACTORY INSPECTORS.

The twelfth annual convention of this body was held at the State House, Boston, during the week beginning Sept. 5, 1898. The hospitality of the Commonwealth and of the city of Boston made the occasion delightful as well as instructive.

It is not my purpose to make an extended reference to the discussions of this convention, but I desire to call attention to one or two resolutions, which, coming from such representative men, should carry great weight.

A resolution in relation to restrictive immigration in its bearing upon results of factory inspection reads as follows: —

Whereas, The factory inspectors of the various States have learned from the results of their labors that the inefficiency of our immigration laws is responsible for the surprising increase of a very undesirable class of people in our factories and workshops, forming a menace to the health of our citizens, the rights of our laboring men and women, and the welfare of society at large;

Therefore, be it *Resolved*, that the International Association of Factory Inspectors, in convention assembled, request that the chiefs of the departments of factory inspection of the various States recommend in their next annual reports to the governors of their respective States that they call the attention of their legislative bodies to the existing evil, and ask them to pass such resolutions as they may deem proper, calling upon Congress to enact such laws as will control and restrict the immigration of this class of people landing on our shores.

Another resolution, "recognizing the fact that factory legislation has been a benefit to the wage worker and manufacturer in the various States and Provinces where such laws have been enacted," recommends that the officers of the association use all honorable means to extend such legislation all over the country.

Another resolution provides that the officers of the asso-

Digitized by Google

ciation be requested to use all honorable means to have a uniform law for the entire country, regulating the age limit of child labor, "to the end that all workers and manufacturers be put on a more equitable basis, thus avoiding the present disadvantages under which they work."

It would be almost impossible to estimate too highly the importance of these annual meetings of the factory inspectors of various States and Provinces, the deliberations and discussions, extending throughout the week, being participated in by men of large experience, who are in a position to grasp the principles as well as to master the details of the work of factory inspection.

Enforcement of Laws relating to Fish and Game.

In my report for the year 1897 I took occasion to present the facts, which had become very apparent, relative to the unserviceableness of the steamer "Ocean Gem," which had long been used for the enforcement of the fish and game laws. So utterly out of repair had this boat become that large sums of money were required yearly for most urgent repairs, and it would have been false economy to keep up that annual expenditure with no better results than were reasonably expected. The steamer was not capable of adequate speed, and was wholly unfit for use in rough weather. I felt it to be my duty to present the facts to the Legislature, and to recommend that the steamer "Ocean Gem" be sold, and that a suitable boat be supplied in place of the former. The action taken upon these recommendations is seen in the following resolves of 1898: —

[Chapter 30.]

Resolve to provide for the procuring of a steamer to be used for the enforcement of the fish and game laws.

Resolved, That there be allowed and paid out of the treasury of the Commonwealth a sum not exceeding fifty thousand dollars, to be expended under the direction of the chief of the district police, subject to the approval of the governor and council, for procuring a steamer to be used under the direction of said chief of the district police in enforcing the laws of the Commonwealth relating to fish and game. The steamer procured under the provisions of this resolve shall be built in this Commonwealth. The chief of the dis-

Digitized by Google

trict police is hereby authorized to sell the steamer now owned by the Commonwealth, known as the Ocean Gem, and he is directed to pay the proceeds of such sale into the treasury of the Commonwealth. [*Approved March 22, 1898.*

[CHAPTER 111.]

RESOLVE RELATIVE TO CERTAIN EXPENSES TO BE INCURRED BY THE CHIEF OF THE DISTRICT POLICE IN ENFORCING THE LAWS RELATIVE TO INLAND FISHERIES AND GAME.

Resolved, That there be allowed and paid out of the treasury of the Commonwealth a sum not exceeding five thousand dollars, to be expended by the chief of the district police for the purpose of leasing and paying the running expenses of a suitable boat to be used temporarily in the enforcement of the laws relative to inland fisheries and game, until the new boat now under construction is completed, and for the purpose of fitting up the new boat when completed and paying its running expenses during the present year. [*Approved June 14, 1898.*

The District Police Patrol Steamer "Lexington."

In pursuance of the foregoing resolves, a contract was made with A. D. Story of Essex to build a suitable steamer of wood, after designs furnished by W. E. Waterhouse of Boston. The machinery was constructed by Bertelson & Peterson of East Boston. The "Lexington" is 122 feet over all, 22 feet beam and 9 feet draught. The contract required that the boat should be ready for service in one hundred and twenty-five days; within that time all the interior work was completed, and on the one hundred and twenty-fifth day she had her preliminary trial under the direction of her builder. The speed averaged 12.3 knots, under natural draught. She is fitted with Almy boilers, and her engines are 16 and 36x22 stroke. She has 66 square feet of grate, and is capable of developing greater speed than was shown on her preliminary trial trip.

The trial trip of the "Lexington" was made on Saturday, September 10, and was eminently satisfactory. The speed attained was 13.04 knots, the contract calling for 13 knots. When her boilers and engines are in smooth working order, I am confident that the "Lexington" will develop a speed of 14 knots per hour.

Digitized by Google

The Presentation of a Flag.

One of the most pleasing features connected with the introduction of the new patrol steamer to the service of the Commonwealth was the presentation for its use of an elegant United States flag by the Lexington Post of the Grand Army of the Republic. The occasion was of more than ordinary interest, as it was a graceful recognition of our share with those patriotic veterans in the honor of bearing the famous name of that historic town. When that beautiful flag, in recent months made more illustrious by the sacrifices and success of our gallant army and by the brilliant achievements of our invincible navy, was unfurled on the "Lexington," it seemed to gather into its folds the blessed memories of the "Lexington" of 1775 and of all the intervening years.

Examination of Engineers and Firemen.

In the practical operation of the statute in relation to the examination of persons who applied for license as engineers and firemen, it had become apparent that, to make such examinations as thorough and effective as possible, the members of the boiler inspectors' department of the district police should be furnished with suitable apparatus. Accordingly the Legislature, upon my petition and after hearing, passed the following resolve: —

[Chapter 40.]

Resolve to provide for the purchase of suitable apparatus for the practical examination of engineers and firemen.

Resolved, That there be allowed and paid out of the treasury of the Commonwealth a sum not exceeding twenty-five hundred dollars, to be expended under the direction of the chief of the Massachusetts district police for the purchase of suitable apparatus to be used by the members of the boiler inspection department of the district police in the examination of engineers and firemen. [*Approved March 29, 1898.*

Digitized by Google

Operation of the Laws relating to Inspection of Boilers and Examination of Engineers.

The law relating to the inspection of boilers has been in force three years. The law requires the inspection by this department of all boilers except locomotive boilers not insured by the two boiler inspection companies making a business of inspecting and insuring boilers in this State. As it did not appear conclusively that these boilers thus inspected were relieved from the necessity of inspection by this department, the matter was more clearly defined by the passage of chapter 167, Acts of 1898, and these boilers are clearly not subject to any inspection by this department. The provision for the appointment of four additional members to the boiler inspection department, by chapter 261, Acts of 1898, gave much needed relief to this department, and it has been possible to inspect a large number of boilers that could not be reached because of the over-pressure of work upon the inspectors. It is the intention to provide, if possible, for the yearly inspection of all boilers. The number of boilers uninsured is much larger than was expected, and the number is increased by the addition of very many boilers from those previously insured, the owners preferring the inspection by this department.

The importance of this work is more clearly demonstrated with each succeeding year, and the large number of orders of changes and repairs to correct defects shows the condition in which boilers were found. Many of the boilers inspected had never been examined since they were first put into use; and, while some had to be condemned as totally unfit for use, others were found in a very dangerous and defective condition, needing extensive changes in order to make them fit to be operated. I am pleased to note a very ready and willing compliance with the orders issued by the inspectors, on the part of the owners of boilers, and in the majority of cases the owners are glad that their boilers have been put in a condition where they can be relied upon. Very much of the neglect of boilers has come from ignorance of the necessity of frequent inspection; and in other cases because the boiler

Digitized by Google

had given no trouble, and so became left to itself without receiving much thought. Whenever a boiler owner has the condition of his boiler pointed out to him, he is invariably glad to be informed and willing to make all needed repairs.

The following is a summary of the inspections of boilers and the examinations of engineers: —

Summary of Examinations.

Number of applicants examined,	5,655
Number of licenses issued,	3,571
First class,	103
Second class,	201
Third class,	333
Special,	1,720
Firemen,	1,059
Hoisting,	155
Number of licenses refused,	2,084
Number of examinations not completed,	980
Revoked,	2

Summary of Inspections.

Boilers inspected,	1,961
Number of defects found,	6,631
Number of dangerous defects found,	2,589
Boilers ordered repaired,	1,133
Boilers condemned,	43

Summary of Inspection Work.

The record of work performed by the inspectors shows that 7,166 manufacturing, mechanical and mercantile establishments have been inspected since my last report. Orders have been issued to the number of 3,178, and it is gratifying to state that there has been a general compliance with said orders.

Careful attention has been paid to the safety of elevators, and the reports of the inspectors show that 1,490 elevators have been inspected during the year.

The reports of the inspectors show that the number of children employed in manufacturing, mechanical and mercantile establishments, also workshops, is 14,994; young per-

Digitized by Google

sons employed between fourteen and sixteen years of age, 14,907; children employed between thirteen and fourteen years of age, 87.

Number of males employed, ...	266,407
Number of females employed, ...	183,023
Whole number of males and females employed, . .	449,430

Applications for licenses as engineers or firemen to the number of 5,216 have been received. There have been issued 2,512 engineers' licenses and 1,059 firemen's licenses.

Ventilation and Sanitation of Workshops, Factories, School-houses and Public Buildings.

There has been a constantly increasing diffusion of correct ideas about ventilation and approved sanitary appliances in buildings occupied for industrial purposes, for schools and public service. There is yet room for improvement, and each generation seems to require special instruction in ideas and methods which to the well-informed appear to be merely elementary. That foul air and unclean surroundings are injurious to health are facts as familiar to the common mind as the first four rules of arithmetic. That the public health is liable to be seriously impaired by the unsanitary condition of a single dwelling-house any intelligent community fully understands. But carelessness, indifference, an unenlightened notion of individual self-interest, repugnance to change, either separately or combined, frustrate the well-considered efforts of the health authorities to abate and suppress private and public nuisances, and afford communities thorough protection from causes of disease.

If the vitality of the inhabitants of a given town or city could be as accurately measured off and observed as the figures on a thermometer which indicate temperature, if the actual state of each person could be seen with its daily fluctuations, the average health of that town or city could not be determined with more scientific exactness than practically is now done under existing methods.

Take any modern school-house, for example, and let an inspector visit it after the school has been in session for

Digitized by Google

an hour or more, even under favorable conditions; there is an apparent languor among the scholars which betrays itself in inattention to study; the atmosphere is stuffy; the measure of intellectual work done is quite limited, and has evidently been done under some external pressure. The average vitality of the pupils is low. Now, for temporary purposes, change these conditions, force pure air into the room, expel the foul air, summon the children to exercise in light gymnastics, and you almost seem to have created a race of new beings. The indicator on your measure of vitality has quite perceptively risen.

Why do children attend school? To receive an education, is the obvious answer. But physical training is an important feature, and must not only precede but must constantly accompany intellectual training. If a child starts in life with a frail physique, the first duty of his parents is to teach him how to secure physical vigor, to see he gets it by means of nourishing food, abundant exercise in the open air and the best health conditions attainable. It is better, if necessary, that he should not be able to name the letters of the alphabet until he is six or eight years of age, than that he should become a mental prodigy with the chances of an early death from violations of health laws.

Within suitable limitations, the Commonwealth has established the policy of carrying along together the care of the body with the culture of the mind, so that, by means of improved ventilation of our school buildings and the sanitary appliances and methods the broadest education of our school children can be secured. The general lines along which the earlier legislation has been maintained has not since by later enactments been very much changed. It is, however, an encouraging fact that no backward step has been taken or even considered by the Legislature of Massachusetts in reference to these laws.

The primary facts of ventilation are better known to school children to-day than they were to their parents a generation or two ago. There is much that is suggestive to the eagerly curious mind of the young in the appliances for ventilation and sanitation which are observable in our school buildings of to-day. When curiosity is excited inquiry follows, and

Digitized by Google

the information thus received becomes the fruitful seed of coming years. In the oral instructions imparted in some schools in the form of object lessons, scientific methods of ventilation are translated by the teacher into language easily understood by the children. Nothing could be more useful to them, or more favorable to the establishment of correct ideas of a subject so vital and important. The principles of ventilation should be taught to every child in the land. In this important work the home may well co-operate. When children are taught that proper ventilation is a vital means of obtaining and keeping good health, a most useful and practical lesson will have been learned. Begin with the simple things. The chemistry of air,—show what constitutes the atmosphere we breathe, and by which life is sustained. There are proportions of the gases which make air life giving, and which, disturbed, radically make it an agency of death. Explain why the tainted air of a close, unventilated room is dangerous, and in time becomes deadly; and why a lighted candle, let down into a well where air has long been stagnant and unused, becomes extinguished, and thereby shows that the air confined is fatal to human life.

Should not the removal of foul air and the abundant supply of fresh air be considered an important part of the scholars' education? Will impressions received under such circumstances ever be forgotten? If foul air will affect the strength of strong laborers, what must be the effect of such air on the mental growth of children in school?

Light all the gas burners in a closed sleeping-room, and keep them lighted for some hours before retiring, and the violent headache and perhaps nausea which you will have the next morning will afford a valuable lesson as to the need of pure air. The dizziness, headaches and similar unpleasant symptoms which affect our school children confined in close, ill-ventilated school-rooms, are the alarm bell which sounds the note of danger. The remedy for such an evil is known to every well-informed person, and scarcely need be stated. The pupils in a crowded, ill-ventilated school-room are listless and inattentive until the windows are thrown open and a recess is declared. The sicknesses which break out among school children at times are often fairly attributable to pre-

Digitized by Google

ventible causes. The word "contagion" is too frequently supposed to account for everything.

Those who have made a study of this question of ventilation say that the foul odors of the school-rooms of the primary grades are vastly more offensive than those noticeable in school-rooms of higher grades. The lack of cleanliness of garments and of person suggests still other sources of impurities, and cause wonder to cease that teachers are disabled by illness which can be imputed only to the vile air of the school-rooms in which so much of their time is spent. Every school-room and all other buildings in which persons assemble for labor or similar purposes should be thoroughly ventilated. Fresh air and plenty of it will do more to prevent disease and to repair its ravages than the best advertised nostrums in the land. Around this fact have been grouped all the laws of the Commonwealth in relation to ventilation and sanitation.

It is only in somewhat recent years that attention has been fully directed to the important necessity of scientific ventilation and sanitation of factories, workshops and public buildings. In such buildings women and children, as well as men, more or less robust are employed many hours weekly. The dust from fabrics and raw material stirred up by the operations of machinery, the high temperature in which work must be done, are important considerations that bear upon the health and comfort of all operatives. Experience has shown what may be properly done to make more tolerable the conditions under which that kind of labor must be done. Not to leave to chance or caprice the correction of acknowledged evils, the Legislature has undertaken to throw the shield of legal protection about that class of its laboring population.

Ventilation practically considered.

I have in former reports given a history of the various methods resorted to in heating and ventilating occupied apartments. The subject is one of importance, and we can well afford to devote a few lines to the continuance of the same subject.

Digitized by Google

No heating of a room can be said to be made complete unless provision is made for supplying it with pure air. Two systems have been adopted to secure ventilation,—one by draught (gravity system) and one by mechanical means; each has its advocates, and both are no doubt applicable according to circumstances. There are many examples of practical ventilation in the State without the aid of mechanical means.

The absolute necessity of a very active and certain system of ventilation for school and other public buildings was the occasion of the invention of mechanical means to accomplish the purpose.

Mechanical ventilation is produced by the action of fans or other air-moving devices, producing an air movement regular and unvarying, in stated volumes, exhausting the foul air and supplying its place with fresh, pure air. In any case, either by the gravity or mechanical system, the air ducts or flues must have a proper and definite relation to each other, or the current of air will be imperfect. The upward current of air has a strict relation to the capacities of the flues through which it is made to pass. The size of the ducts must be carefully studied; too large a duct would require a correspondingly large consumption of coal, and too small a flue would fail to remove the vitiated air as fast as generated. Good ventilation consists in the proper arrangement and distribution of the ducts for the incoming and outgoing of the air, and their relation and correspondence to each other. Heating and ventilation belong together; they cannot be dissociated. We may ventilate our rooms, but they will be rendered cold in the act. We may warm our rooms, and the air will become vitiated in the process of shutting out the cold and in keeping in the heat. The two matters must be harmonized, and therein lies the difficulty. The system of mechanical ventilation can be relied upon with certainty. Without going into the merits of the two methods now applied for ventilation, it is of the greatest importance that in occupied rooms the impurities which have been gathered from respiration or other causes should have some direct means of removal by mechanical means, or, in other words, by applying power to effect the

Digitized by Google

change of air by the exhaustion of the foul air and the supplying of fresh air. Under the changes of wind and weather such as would obstruct any chimney draught, it discharges the air with a momentum constant and reliable. No state of weather without, no humidity of air within, can resist its power. It will impel the air of a crowded room loaded with vitiated air with certainty to the outlets provided for the extraction of foul air, and will ensure an abundance of fresh air to supply its place.

During the past year the request for information on the subject of heating and ventilating school-houses and other public buildings have been frequent. That all interested in this important subject may derive the benefit of this department, I present in this portion of my report plans showing methods of heating and ventilation submitted to me by the inspectors specially assigned to this scientific branch of our inspection work.

Description of Plans for heating and ventilating an Eight-room School-house, drawn by Inspector John T. White.

In compliance with your request, I have the honor to submit herewith plans for a school-house, showing how the best work is now being done in what is commonly known as a gravity system of heating and ventilation.

Instead of designing such a building, as I did last year, I have selected for the purpose a building now in process of erection in a town near Boston, in which the work of ventilation is laid out in a very simple manner and in substantial accord with the recommendations of this department. The building is of brick, two stories in height, and contains 8 school-rooms, each 28x32, and 12 feet in height.

The heating is furnished by two horizontal steel tubular boilers, of about 30 horse-power each. There is also a small boiler for heating the vent flues in mild weather. The radiation is nearly all indirect, massed in two large chambers in the basement, four rooms being heated from each chamber. There are direct radiators in the play-rooms in basement and in the corridors and principal's room. There is a foot warmer, so called, in the lower hall, but as the air is taken from the same hall instead of from outside, it is practically a direct radiator. There are also direct radiators in each vent flue.

Digitized by Google

Plate No. 1 shows the basement, with the air chambers, indirect radiators, boilers, sanitary appliances and the supply piping. There are from 360 to 380 square feet of radiation for each room, so arranged that one-third, two-thirds or the whole may be used.

Plate No. 2 shows the first floor, with four school-rooms, corridors, arrangement of stairways and entrances, location of fresh-air inlets and foul-air outlets. The registers shown in floor of passages between the rooms open directly into the air chambers below. There are no valves in these registers, the openings being closed when required by tight-fitting trap doors under the floor. When the schools are not in session the outside air windows to heating chambers are closed, and these trap doors opened, thus taking the air for heating from the rooms instead of from outside, — a method practically equivalent to direct radiation and effecting a considerable saving of coal.

Plate No. 3 shows the second story, containing four rooms and a principal's room. This room is gained, as will be seen, by reversing the direction of the rear stairway and landing on the first floor near the rear entrance instead of towards the main corridor, as in case of the front stairs.

Plate No. 4 shows sectional details of the heating and ventilation, such as radiator stacks, fresh-air ducts, brick vent chimneys, dampers, mixing valves, chains and fastenings. I have also given on this sheet a sketch of the wardrobe work, which is somewhat different from the usual construction. There is no wood sheathing on the inside of these wardrobes, the space below the hanging strips being finished in hard plaster on metallic lathing. The walls of the class rooms below the black-boards are finished in the same way. The inside finish of the building is of ash, filled in the usual way, keeping as near as possible the natural color of the wood, and finished in three coats of shellac rubbed down smooth.

The perspective view of the exterior is furnished by the kindness of the architects, Messrs. Gay and Proctor of Boston, and gives a good idea of the architectural beauty of the building.

Digitized by Google

GAY & PROCTOR ARCHT'S, BOSTON.

Digitized by Google

Digitized by Google

Digitized by Google

Digitized by Google

Digitized by Google

Digitized by Google

Digitized by Google

Digitized by Google

Digitized by Google

Digitized by Google

PLAN FOR EIGHT-ROOM SCHOOL BUILDING, SHOWING COMBINATION OF MECHANICAL AND GRAVITY SYSTEMS OF VENTILATION, DRAWN BY INSPECTOR JOSEPH A. MOORE.

In compliance with your request, I respectfully submit plans for a two-story, eight-room brick school building, showing the heating and ventilating appliances. It is intended to use a combination of the gravity and mechanical systems of heating. In the gravity system there is provided 400 square feet of indirect cast-iron heating surface for each school-room. This is divided into stacks of 100, 140 and 160 square feet for each room, in order that either a part or the whole may be used as desired, and is sufficient to meet the requirements of heating and ventilation in the coldest weather.

In the floor of the closet between the rooms on each side of the lower corridor is a register for rotating the air when the rooms are not in use. Fresh air is admitted through the windows in the two cold-air rooms in the basement, when the gravity system is in use (the ducts leading from the fan being then closed) in cold weather, when the difference between the inside and outside temperature is sufficient to furnish a full supply of warm, pure air by gravity flow.

There is also provided in the basement of one of the corridor extensions a supplementary means of supplying air by means of a fan driven by an electric motor, and also 800 square feet of indirect cast-iron radiation, divided in sections of 100, 140 and 160 square feet, as in the other cold-air rooms. It is intended this part of the apparatus is to be used in moderate and calm weather, when the desired supply of fresh air cannot easily be obtained by the gravity system without overheating, especially for use in the spring and fall months.

When this part of the apparatus is in use, the windows leading from outside directly into the gravity cold-air rooms are to be closed, and the sliding damper at the entrance of the galvanized-iron ducts into the gravity cold-air rooms to be opened, the windows in the cold-air room in the corridor extension in the basement opened and the fan run by the motor, the air either passing through the heated radiators, or, by means of a specially designed damper, going to the fan without passing the radiator. This damper can be used as a mixing damper, to regulate the heat and allow more or less warm or cold air to pass the fan, as may be desired.

A four-inch metallic thermometer, placed in the side of the galvanized iron duct leading to the air rooms at the bottom of the warm-air ducts, which go to the school-rooms, will enable the

Digitized by Google

janitor to regulate the temperature of the air sent from the fan. Should it be desired to use the fan when the air is colder than the fan radiation can properly warm, a portion of the radiation in the other cold-air rooms can be used to good advantage. By the use of this combination system 40 cubic feet of air per minute can be supplied for each pupil, under all conditions of temperature. While it may add somewhat to the first cost of the building, the effective work will more than make up for the extra first cost.

If electric power is not available, the fan may be run by a low-pressure engine, having a cylinder of large diameter. This, however, will require a change in the piping and setting up of this part of the apparatus, and a small boiler of sufficient size to run the engine and also to furnish heat for the steam pipes in the vent ducts when the large boilers are not in use in warm weather.

The vent ducts are supplied with 20 square feet of $1\frac{1}{4}$ inch pipe radiation each. This is placed about one foot above the opening from the room, and inclined up and across the vent duct, and is provided with dampers for closing off or regulating the out-flow of air as is usual in the gravity system.

When it is desired to use the rotating registers in the floor between the lower school-rooms, the vent openings from the school-rooms and the openings in the cold-air rooms are closed, and the registers in the floor opened; the doors from the school-rooms to the corridors are opened, and the direct radiation and the foot warmers in the corridor supplied with steam.

This, however, should be done only when the school-rooms are not in use, and after time has been allowed to change the air after the close of the session. The rotating system should not be used under any pretense when the school is in session.

Plans of basement, showing location of heating and sanitary appliances and of the first and second stories, are shown; also a sheet showing sections through fan system and details for dampers; also sections, showing radiation and warm-air ducts in the gravity cold-air rooms.

Digitized by Google

Digitized by Google

janitor
Should
fan rad
other c
of this
supplie
While
effecti

If el
pressu
ever, v
part o
the en
ducts

The
pipe
openi
and is
flow c

Wh
betwe
schoo
and
room
the f

Th
not i
the c
unde

Pl
appl
shee
also
cold

Digitized by Google

Digitized by Google

janitor t
Should
fan radi
other co
of this
supplie
While i
effectiv
If el
pressu
ever, v
part of
the en
ducts
The
pipe
openi
and is
flow c
Wl
betw
scho
and
room
the f
Tl
not i
the
und
P
app
shee
also
col

Digitized by Google

Digitized by Google

jat
Sb
fa
ot
of
su
W
ef

pı
e'
p
tl
d

F
c
t
f

l
t
t
:
.

Digitized by Google

Digitized by Google

Digitized by Google

Description of Plans for Heating and Ventilation, by Inspector Frederick W. Merriam.

The plans herewith submitted are for a village school, designed to illustrate a system of heating and ventilating by steam and mechanical means of circulation. In the construction, the matter of safety from fire is thoroughly considered, and the stairways and exits are worthy of consideration. The size and location of the several supply and vent flues, openings and connecting ducts are such as to insure good results.

Plate 1: The basement has two large, well-lighted play-rooms, and suitable provision for the boiler, fuel, bicycles, storage and the mechanical apparatus. The boiler, as shown, is a horizontal tubular of usual type, and the mechanical apparatus consists of an electric motor, two counter shafts with cone pulleys, an upright shaft extending to the attic to connect with the exhaust fan, and two plenum fans, which insure a more uniform distribution of air throughout the building under all conditions than one. The belt connections are such that the change of speed, by the cone pulleys, applies relatively to all parts of the system. The air is conveyed from the plenum fans to the several heating chambers by metal ducts, provided with equalizing dampers at each take-off, and suspended from the ceiling. The indirect heating surface is shown in two banks, in different chambers, to each flue, the object of which will hereafter be given. The play and bicycle rooms are heated by pipe circulation on the ceilings.

Plate 2: The first story has two class rooms of usual size, and lighted from two sides, a hall with ample seating capacity for 250 persons, suitable rooms for the committee or superintendent and teachers, with toilet and storage rooms connecting, and cloak rooms with sanitaries connecting. In the main corridor are two foot warmers and closet containing two of the upright shaft bearings, a stand pipe and hose rack. The vestibules at the ends of the building connect with both the first story and basement. The cloak racks are made of heavy wire netting of large mesh, about five and one half feet in height; and those on walls are furred out sufficiently to admit of a free circulation of air back of clothing. The cloak and small rooms are heated wholly by direct radiation, and the cloak rooms are ventilated through the sanitary rooms under the doors.

Plate 3: The second story has two class rooms, cloak rooms with sanitaries connecting and closet in main corridor containing two upright shaft bearings, stand pipe and hose rack the same as in first story, a class room over the front entrance, lighted from

Digitized by Google

one side, and two closets for storage in the main corridor. The hall extends midway into this story (see sectional view).

Plate 4: The attic shows the exhaust fan room with belt connection from the upright shaft, and the connections of the vent flues from the several rooms, corridors and sanitaries with the exhaust fan room by metal ducts. For convenience, both stairways are brought to this story, but enclosed at the landings.

Plate 5: Shows sectional views. A, A, is a transverse view through different parts of the building. That of the main part in basement, first and second stories, is through the supply and vent flues; while that of the rear part, attic, cupola and roofs, is through the centre, and shows the arrangement of flues, exhaust fan room and their several connections, and the height of stories and the general construction. B, B, is a cross view through the vent flues from sanitaries, which are provided with steam-pipe coils near base for gravity circulation, and with switch dampers and ducts in attic for connection with exhaust fan room when necessary.

Plate 6: Shows details through heating chambers and supply flues. The heating surface of each section is in two banks, in different chambers, and each provided with a mixing damper. They are marked P and S, denoting primary and supplementary, and the swing of the mixing dampers is shown by H, T and C, denoting hot, tempered and cold air. The sections vary only as to conform to their location or that of the room they supply. In all cases the tempering air enters the flue on the back side, which prevents downward cold draught. The heating surface shown is estimated sufficient to maintain the required temperature in the respective rooms when the outside temperature is not colder than 15° F. above zero. When colder than that, the direct radiators in rooms are used as auxiliaries, and also designed for night work. The supplementary mixing dampers as shown are operated by a mechanical device controlled by thermostats in the rooms, though the various hand methods are applicable. The connections of the supplementary and primary mixing dampers are such that the former swings from H to T, without moving the latter, but when from T to C, the latter swings in full. By this adjustment of mixing dampers and a proper division of the heating surface, the air when delivered at a temperature colder than 40° F. above zero would pass through the primary bank of heating surface; but when the air is from 40° to 60° it would pass a relative portion under this bank, thereby providing the supplementary chambers with air of such temperature for flue tempering as location or conditions require. When the air outside does not require heat, it is

Digitized by Google

Digitized by Google

Digitized by Google

Digitized by Google

Digitized by Google

3

Digitized by Google

Digitized by Google

4

Digitized by Google

Digitized by Google

5

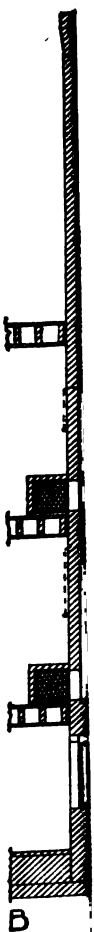

Digitized by Google

Digitized by Google

Digitized by Google

Digitized by Google

delivered to the flues without passing through either bank of heating surface. This arrangement, properly applied, overcomes many of the objections to the central primary heating chamber, and the results are as near separate room methods as possible.

In places where electric power is not available, steam, water or gas could be applied with equally practical results. The division of the supply and exhaust of the hall and class room over the front entrance is for the better distribution of air in rooms of their class, the equalization of the system and convenience in space, and avoids objectional down currents, experienced under certain conditions, when inlets are opposite inside walls. The cupola and fresh-air room openings are provided with valves or shutters, so the janitor may close, if desired, when the building is unoccupied. The estimated capacity of the apparatus for the three different speeds by the cone pulleys is 30, 45 and 60 cubic feet of air per minute per person for the seating capacity. The plans and description of the heating surface are based upon the medium speed. The placing of the direct radiators in class rooms and hall under the inlets is for harmonious work with the system when used as auxiliaries.

In the construction, the walls, partitions, heating chambers and flues are shown as brick, except the partitions forming the vestibules, basement stairways and sanitary, toilet and storage rooms, which are hollow terra-cotta. Steel beams or girders are intended where necessary to give strength and stiffness. Spaces are provided between timbering and flues, and the floors are fire-stopped where necessary. The stairways are well separated, and the rise, 6 inches, and run, 10½ inches, make them practical for pupils of all ages. The sanitaries as shown and sittings are not of any special pattern, but should admit of a thorough local vent, in addition to that of the rooms, and be provided with separate self-acting and full-flushing tanks. The bicycle rooms are provided with racks designed to securely hold the bicycles in a upright position, which gives more floor space and lessens the liability of injury.

Report of Buildings inspected, including Plans received and Changes recommended.

Report of Inspector White.

Sir: — I have the honor to submit the following report of my work as an inspector of public buildings in District No. 1, during the year ending Nov. 1, 1898.

As you are aware, my work during the past year has been almost entirely confined to new buildings and to the inspection of buildings reported to be in a dangerous condition.

Digitized by Google

All the orders I have given in regard to dangerous buildings have been complied with, and in only one case have I had to take further proceedings after the issuance of an order. In this case I had to call for a board of survey, as provided by law. The board of survey fully sustained my order, and the owner of the building then carried out their recommendations.

In new buildings the work consists at first in examination of the plans when filed in this office, and consultations with architects, owners and committees in regard to the application of the law and the requirements of this department. Afterwards there must be inspections of the buildings, to see if the requirements of law are complied with as stated in the specifications, or directed when the plans were examined.

In some matters, such as means for preventing spread of fire, this inspection, in order to be effectual, amounts to actual superintendence while such work is being done. In many of the towns and in some of the larger cities in my district there are practically no building regulations beyond establishing a fire limit, and all the work of securing safety from fire in the buildings in such places must be done by the State inspector.

There is also a large amount of work to be done in making careful inspection of the ventilation of new buildings when completed and in use, and also of the older buildings when complained of, or when found defective in the regular course of work.

In the matter of examining plans for ventilation of school-houses, the work now consists largely in correcting errors of detail, as nearly every plan for such buildings shows provision for what the architect or committee supposes will provide a sufficient supply of air. Very much more attention has been paid to the ventilation of halls and other places of assemblage during the past two years than ever before, and in some cases very successful systems have been installed. In school-houses the greatest recent improvements in ventilation have been made in the direction of economy, both in first cost of apparatus and in expense of operating. During the earlier years of the operation of the law the principal object of engineers and contractors was to furnish to and remove from the rooms the amount of air said by expert authorities to be required for good ventilation. Any system which would do this was necessarily more expensive than the old methods of warming the rooms by direct radiation or by introducing a small amount of air at a very high temperature. Consequently at first the committees having charge of the erection of school buildings, hampered, as they frequently are, by insufficient appropriations, were looking for systems of heating and ventilation which could be installed at a low

Digitized by Google

first cost, regardless of the expense of operation. Generally such buildings are erected under the authority of special committees, and it is the school committees and janitors who are held responsible for the cost of fuel consumed. If one hundred dollars is saved in the first cost of the apparatus selected and ten dollars' worth more of coal is burned every year, the investment can hardly be called an economical one. Since it has been demonstrated that it is very easy by simple methods to furnish and heat the amount of air requisite for good ventilation, more attention has been paid to securing economy in consumption of coal. In the last three years great progress has been made in this direction, and in many schools the cost of heating and introducing the requisite amount of air is but little above the theoretical calculation of the necessarily increased cost over the old methods. Very much of this improvement, I think, is due to suggestions made by the inspectors in this department. Every point of improvement is noted by them, and several methods of economical work illustrated in your annual reports are now almost universally adopted by ventilating engineers. The improvement in ventilation of school-houses since the enactment of the law of 1888 amounts to a practical revolution of methods, and the good work is still going on.

I append a list of buildings for which plans have been filed with me since my last report, with a list of some of the most important changes recommended by me.

Plans Received and Changes Recommended.

DISTRICT No. 1. JOHN T. WHITE, *Inspector*.

BUILDING.	Location.	Changes Recommended.
Shute Memorial library,	Everett,	- -
Tarbell's block,	Pepperell,	Stairs widened; fire-stops improved; ventilation.
Woburn auditorium,	Woburn,	Improvement in ventilation; ways of egress; fire-stops.
Holton's hall,	Medford,	Fire-stops; escape from fire; ventilation.
Arlington school annex,	Lawrence,	Plans not approved.
Packard school annex,	Lawrence,	Plans not approved.
Saunders school annex,	Lawrence,	Plans not approved.
Wigginville school,	Tewksbury,	Improvement in ventilation; fire-stops.
Walnut square school,	Haverhill,	Doors widened.
Union Square Baptist church,	Somerville,	Means to extinguish fire provided.
Y. M. C. A. hall,	Beverly,	Fire-stops; change bolts on doors; rail stairs.
Dormitory at asylum,	Danvers,	Better fire-escape.
Corinthian yacht club,	Marblehead,	- -

Digitized by Google

Plans Received, etc. — Continued.

Building.	Location.	Changes Recommended.
McKenna's block,	Stoneham,	Fire-escape; fire-stops; ventilation.
— library,	Gloucester,	- -
Glenwood school,	Malden,	- -
Annisquam yacht club,	Gloucester,	- -
Evangelical Congregational church,	Concord,	Fire-stops; improvement in ventilation.
French Baptist chapel,	Lowell,	Plans not approved.
Dracut Centre school,	Dracut,	- -
Public library,	Lynn,	- -
Savings bank building,	Ayer,	Fire-stops; ventilation.
Irvine block,	Lowell,	- -
Phillips Brooks house,	Cambridge,	- -
First Trinitarian church,	Lowell,	Fire-stops; improvement in ventilation.
French parochial school,	Lawrence,	Improvement in ventilation; doors to open out.
Unitarian church,	Winchester,	- -
First Baptist church,	Beverly,	Ventilation; fire-stops.
Jefferson Avenue school,	Salem,	Fire-stops and in matter of ventilation.
Norris Street school,	Cambridge,	- -
G. A. R. hall,	Gloucester,	Fire-escape; fire-stops; ventilation.
Peabody school,	Cambridge,	- -
Locke school,	Arlington,	- -
Gymnasium, Radcliffe college,	Cambridge,	- -
Lewis school,	Lynn,	- -
Arlington school,	Methuen,	Improvement in ventilation.
Currier school,	Methuen,	Improvement in ventilation.
West-side school,	Methuen,	Changes to improve ventilation.
Saunders Hill school,	Haverhill,	Improved method of ventilation.
Tufts school,	Medford,	- -
Ward Six school,	Lynn,	- -
Randall dining hall,	Cambridge,	- -
Park Avenue M. E. church,	Somerville,	Fire-stops; ventilation.
Congregational church,	Lowell,	Better ventilation.
Home for Aged People,	Cambridge,	Improvement in fire-escapes.
Congregational church,	Acton,	Plans not approved.
Primary school,	Newbury,	Doors to open out.
Swedish Evangelical church,	Malden,	- -
Montvale school,	Woburn,	- -
Adams school,	Lexington,	- -

Digitized by Google

Plans Received, etc. — Concluded.

Building.	Location.	Changes Recommended.
Roman Catholic church,	Saugus,	- -
Masonic hall,	Peabody,	Improvement in fire-escape; ventilation.
Hardy school,	Beverly,	- -
Baptist chapel,	Lynn,	- -
Odd Fellows building,	Methuen,	Improvement in fire-escape.
Agricultural building,	Reading,	- -
McCarthy & Coggan,	Malden,	Door to open out.
Chestnut Street school,	Wilmington,	- -
Primary school,	Rockport,	- -
Derosey musee,	Gloucester,	Fire extinguishers.
Roberts school,	Cambridge,	- -
Mt. Olive Baptist church,	Cambridge,	- -
Four-room school,	Wakefield,	Doors to open out.
Post-office building,	Billerica,	- -
St. Joseph's school,	Lynn,	- -
Adams school,	Everett,	- -
Glendale school,	Everett,	- -
Rogers building,	Beverly,	Ventilation; doors to open out.
Maple Street school,	Danvers,	- -
Church of Christ,	Everett,	- -
Knights of Malta hall,	Gloucester,	Stairs from banquet room.
Belmont block,	Belmont,	Doors to open out; ventilation.

Report of Inspector Bardwell.

Sir: — I respectfully submit, in tabulated form, reports of plans received and buildings inspected by me in the past year.

Fewer plans were filed than usual; accounted for principally by the war, for up to the time of its beginning the number was fully up to the average. Most of the plans received by me are for apartment, tenement and lodging houses, and the uncertainty as to the effect of the war upon business rendered builders cautious, resulting in the temporary postponement of several projected buildings.

The orders and suggestions relative to fire-stops and ways of egress in new buildings have as a rule been adopted without question.

Digitized by Google

I have found more than the average number of lodging-houses needing rope fire-escapes, and usually where the ropes were lacking there were no means provided for extinguishing fires. Very many of the owners of lodging-house property are ignorant of the existence of a law requiring ropes and fire-pails, but acknowledge the wisdom of it when its provisions are explained to them.

A number of outside fire-escapes have been placed upon both new and old buildings. This item generally involves considerable expense, but it is an exception when serious objection is made to a compliance with the law.

Plans Received and Changes Recommended.

DISTRICT No. 1. HENRY J. BARDWELL, *Inspector.*

BUILDING.	Location.	Changes Recommended.
Ayer Tanning Co.'s factory,	Ayer,	Slow-burning stairway.
The Sweetwater hotel, addition,	Bedford,	Outside fire-escapes.
Talbot mills, addition,	Billerica,	None.
Twenty Associates' tenement house,	Cambridge,	None.
Irving & Casson's factory, addition,	Cambridge,	Tinned doors.
Grogan's tenement block,	Cambridge,	Fire-stops.
Schmidt's tenement house,	Cambridge,	None.
Berry's apartment house,	Cambridge,	Fire-stops; tinned doors.
Hotel Millen,	Cambridge,	Fire-stops; tinned doors.
The Dunvegan, apartment house,	Cambridge,	Fire-stops; tinned doors.
Westmorly court, dormitory,	Cambridge,	Outside fire-escapes.
Tarlinsky's tenement block,	Cambridge,	Fire-stops.
The Montrose, apartment house,	Cambridge,	Fire-stops; tinned doors.
The Eddie, apartment house,	Cambridge,	Fire-stops; tinned doors.
Reversible Collar Co.'s factory, addition.	Cambridge,	None.
Dyrne's apartment block,	Cambridge,	Fire-stops; tinned doors.
Petterson's bakery,	Cambridge,	Fire-stops.
Lamb & Ritchie's factory,	Cambridge,	None.
Conant's blume factory,	Concord,	Additional stairway.
The Glendale, apartment block,	Everett,	Fire-stops.
The Alonzo, apartment house,	Everett,	Fire-stops.
The Prescott, apartment house,	Hudson,	Fire-stops; outside fire-escape.
Mass. Mohair Plush Co.'s mill,	Lowell,	None.
Fessler's tenement house,	Lowell,	Brick division wall; fire-stops.
Murphy's tenement block,	Lowell,	Two brick division walls; fire-stops.
Leary's tenement house,	Lowell,	None.

Digitized by Google

Plans Received, etc. — Concluded.

Building.	Location.	Changes Recommended.
Langlais' tenement house,	Lowell,	None.
Lowell M'f'g Co.'s weaving mill, annex.	Lowell,	None.
Reed's tenement house,	Lowell,	None.
Barker block,	Lowell,	None.
Goulet's tenement house,	Lowell,	Brick division wall; fire-stops.
The Downing, tenement block,	Lowell,	Brick division wall; fire-stops.
Lowell M'f'g Co.'s dye house,	Lowell,	None.
Higgin's tenement house,	Lowell,	Brick division wall; fire-stops.
The Arabella, apartment house,	Malden,	Fire-stops.
Fire-station, ward 1,	Malden,	None.
The Pacific, tenement house,	Malden,	Fire-stops.
Frye's currying shop,	Marlborough,	Outside fire-escape.
Davy's factory,	Marlborough,	Outside fire-escape.
O'Grady's apartment house,	Marlborough,	Fire-stops.
Sircom's skirt factory,	Melrose,	Outside fire-escape.
Newton rubber works, annex,	Newton,	Additional egress.
Farwell hall, dormitory,	Newton,	Fire-stops.
Estes' apartment house,	Newton,	Fire-stops.
Baker's tenement house,	Somerville,	Fire-stops.
Bailey's apartment house,	Somerville,	Fire-stops.
Combination stable and sheds,	Somerville,	None.
Holland street fire-station,	Somerville,	None.
Hotel Woodbridge, addition,	Somerville,	Fire-stops.
The Willow Dale, casino,	Tyngsborough,	Additional stairways; doors open out.
Waltham Dial Co.'s factory,	Waltham,	Outside fire-escape.
Beggs & Cobbs currying shop,	Winchester,	Slow-burning stairways.

Report of Buildings Inspected.

Class No. 1, District No. 1. HENRY J. BARDWELL, *Inspector*.

Name of Building.	Orders Given.	Compliances.
Ayer.		
Union house,	Outside fire-escape; fire-pails; repair rope fire-escapes.	
Tayler house,	Rope fire-escapes,	Complied.
Globe hotel,	None,	—
American house,	None,	—

Digitized by Google

Report of Buildings Inspected—Continued.

Name of Building.	Orders Given.	Compliances.
Bedford.		
The Sweetwater hotel,	Additional fire-gong,	Complied.
Cambridge.		
Trinity hall (dormitory),	Rope fire-escapes; fire-pails,	Complied.
Apley court (dormitory),	Rope fire-escapes; fire pails,	Complied.
Dailey's tenement house,	Outside fire-escape,	Complied.
The Craigie (dormitory),	Rope fire-escape; fire-pails,	Complied.
The University (apartment house),	Tin basement doors; dynamo room,	Complied.
Jensen Bros.' candy factory,	Tin ceiling over sugar kettles,	Complied.
Felton hall (dormitory),	Rope fire-escapes; fire-pails; tin over boiler.	-
Prescott hall (dormitory),	Rope fire-escapes; fire-pails,	Complied.
Ware hall (dormitory),	None,	-
Holyoke house (dormitory),	Rope fire-escapes; fire-pails; extend fire escape.	Complied.
Hilton block (1st section),	Rope fire-escapes; fire-pails; extend fire-escape.	Complied.
Dunster hall (dormitory),	Fire-pails,	-
Beck hall (dormitory),	None,	-
Quincy hall (dormitory),	Fire-pails; tin over boiler,	Complied.
Little's building (dormitory),	Fire-pails,	Complied.
Brandon's lodging house,	None,	-
Shepherd's block (dormitory),	Rope fire-escapes; fire-pails; tin over boiler.	Complied.
Buckland's lodging house,	None,	-
Claverly hall (dormitory),	Remove padlock from folding ladder,	Complied.
Winthrop hall (dormitory),	Rope fire-escapes; fire-pails,	Complied.
Lawrence hall (dormitory),	Rope fire-escapes,	Complied.
Lerner hall (dormitory),	Fire-pails,	Complied.
Clark's candy factory,	Outside fire-escape; fire-pails,	Complied.
Hilton block (2d section),	Rope fire-escapes; fire-pails,	Complied.
Irving & Casson's factory,	None,	-
Russell & Co.'s candy factory,	None,	-
Reversible Paper Collar Co.'s factory.	None,	-
Dana chambers (dormitory),	Rope fire-escapes; fire-pails,	-
Randolph hall (dormitory),	None,	-
Chelmsford.		
Moore's woolen mill, No. 1,	None,	-
Moore's woolen mill, No. 2,	None,	-
Dracut.		
Pine Grove hotel,	Rope fire-escapes; fire-pails,	Complied.
Everett.		
Hotel Woodstock,	None,	-
Groton.		
Groton inn,	None,	-
Lowell.		
The Belvidere hotel,	Rope fire-escapes; fire-pails; fire-gongs; notices; tin the boiler room.	Complied.
Manning's lodging house,	Outside fire-escape; rope fire-escapes; fire-pails.	Complied.
Lyons' tenement house,	Outside fire-escapes,	Complied.
People's Club rooms,	Fire-pails,	Complied.
Shanahan's tenement block,	None,	-
Railroad Bank building,	Rope fire-escapes; fire-pails,	Complied.
Mansur block,	Repair outside fire-escape,	Complied.
Lavery block,	None,	-
Albion block,	Repair outside fire-escape; rope fire-escapes; fire-pails.	Complied.
Bascom block,	Rope fire-escapes; fire-pails,	Complied.
Dixon's lodging house,	Outside fire-escape; rope fire-escapes; tin over boiler; fire-pails.	Complied.
Scribner's lodging house, No. 1,	Rope fire escapes; fire-pails,	Complied.
Scribner's lodging house, No. 2,	Rope fire-escapes; fire-pails,	Complied.
St. Charles hotel,	Outside fire-escape; rope fire-escapes; fire-gongs.	Complied.
Inverness lodging house,	Rope fire-escapes; fire-pails,	Complied.

Digitized by Google

Report of Buildings Inspected — Continued.

Name of Building.	Orders Given.	Compliances.
Lowell — Con.		
Arlington hotel,	Rope fire-escapes; fire pails,	Complied.
The Bowditch lodging house,	Rope fire-escapes; fire-pails,	Complied.
Wentworth building,	Fire-pails,	Complied.
Gookin's lodging house,	Outside fire-escape; rope fire-escapes; fire-pails.	Complied.
Lane's lodging house,	Rope fire-escapes; fire-pails,	Complied.
Austin's lodging house,	Repair outside fire-escape; rope fire-escape; fire-pails.	Complied.
Fay's tenement block,	Outside fire-escape; fire-pails,	Complied.
Brodie's lodging house,	Rope fire-escapes; fire-pails,	Complied.
Everett lodging house,	Rope fire-escapes; fire-pails,	Complied.
Davis' lodging house,	Rope fire-escapes; fire-pails,	Complied.
Nelson's lodging house,	Rope fire-escapes; fire-pails,	Complied.
Wing's lodging house,	Rope fire-escapes; fire-pails,	Complied.
Stott's block,	Extend fire-escape; fire-pails,	-
Howe's block,	Fire-pails,	Complied.
Fox's block,	Fire-pails,	Complied.
Keye's lodging house,	Outside fire-escape; rope fire-escapes; fire-pails.	-
Bodkin's lodging house,	Iron balconies; rope fire-escapes; fire-pails.	-
Coleman's lodging house,	Outside fire-escape; rope fire-escapes; fire-pails.	-
Franklin hotel,	None,	-
St. Lawrence hotel,	Repair outside fire-escape; rope fire-escapes.	Complied.
Ryan's tenement house,	Outside fire-escape; fire-pails,	-
St. James hotel,	Fire-pails,	Complied.
Trilby house,	Rope fire-escapes,	Complied.
Ladd house,	Rope fire-escapes,	Complied.
Berwick house,	Outside fire-escape; rope fire-escapes; fire-pails.	Complied.
Murphy's tenement house, No. 1,	Iron fire-escape bridges,	-
Murphy's tenement house, No. 2,	Iron fire-escape bridges,	-
Delany's block,	Repair fire-doors; rope fire escapes; fire-pails.	Complied.
Whitty's lodging house,	None,	-
Dexter's block,	None,	-
Malden.		
Central house,	Rope fire-escapes; fire-pails,	Complied.
Maplewood Methodist church,	None,	-
Malden almshouse,	None,	-
Boston Rubber Shoe Co.,	None,	-
Malden Moulding Co.,	Outside fire-escape; fire-pails; railings to stairs.	-
Marlborough.		
Frye's shoe factory,	Extend outside fire-escape; remove obstructions to fire-escape.	Complied.
Frye's currying shop,	Outside fire-escape,	Complied.
Marlborough Awl and Needle Co.'s factory.	Open door out; cut door through,	Complied.
Loring's shoe factory,	Outside fire-escape; tin ceiling of boiler room.	Complied.
Duston's shoe factory,	Repair fire-escape; remove obstructions to fire-escape.	Complied.
Russell house,	None,	-
Medford.		
Medford house,	Rope fire-escapes; fire-pails,	Complied.
Melrose.		
Sircon's skirt factory,	Outside fire-escape,	Complied.
Goldthwaite's pepsin gum factory,	Repair outside fire-escape; fire-pails,	Complied.
Newton.		
Newton rubber works,	Additional egress; railing to stairs,	Complied.
Pettigrew's tenement block,	None,	-
Woodland Park hotel,	Rope fire-escapes; fire-pails,	-
Farwell hall (dormitory),	Rope fire-escapes,	Complied.

Digitized by Google

Report of Buildings Inspected—Concluded.

Name of Building.	Orders Given.	Compliances.
Shirley.		
The Brookside lodging house,	Rope fire-escapes; fire-pails; tin boiler room ceiling.	Complied.
Edgarton Manuf'g Co.'s factory,	Outside fire-escape,	–
Somerville.		
Hotel Colson,	Watchman; rope fire-escapes; fire-gongs.	Complied.
Hotel Woodbridge,	Fire-pails,	Remodelling building.
Stoneham.		
Rolfe's hotel,	Outside fire-escape; rope fire-escapes; tin boiler room ceiling.	Complied.
Stoneham hotel,	Raise rope fire-escapes to five feet from floor; tin boiler room ceiling.	Vacated.
Jenkins' shoe factory,	Rebuild fire-escape; remove obstructions; railing to stairs.	–
Wakefield.		
Evans' shoe factory,	None,	–
Wakefield Rattan Co.'s weaving mill.	None,	–
Winship, Bolt & Co.'s knitting mill,	None,	–
Aborn's tenement house,	None,	–
McIntosh Bros.' carriage factory,	None,	–
Waltham.		
Hotel Riverside,	Tin ceiling of boiler room; remove combustibles.	Complied.
O'Hara Waltham Dial Co.'s factory,	Outside fire-escape,	Complied.
Waltham Manuf'g Co.'s factory,	None,	–
Watertown.		
Metropolitan laundry,	Additional egress; railing to fire-escape stairs.	Complied.
The E. C. Manuf'g Co.'s factory,	Outside fire-escape,	Complied.
Ralston & Co.'s factory,	None,	–
Stanley Dry Plate Co.'s factory,	Outside fire-escape,	Complied.
Thomas Dalby Co.'s factory,	Outside fire escape,	Complied.
Winchester.		
Tremont house,	Rope fire-escapes; fire-pails,	Complied.
Blank Bros.' factory,	None,	–
Beggs & Cobb's currying shop,	None,	–
Reenstierna Manuf'g Co.'s factory,	Outside fire-escape; fire-pails,	–
Woburn.		
Russell Counter Co.'s factory,	Outside fire-escape; cut door through partition; hang windows to fire-escape.	Complied.
Griffin Shoe Stock Co.'s factory,	None,	–

Report of Inspector Moore.

Sir:—I have the honor to report work done by me for the year ending November 1 in Districts 2, 3 and 6.

The tabulated report indicates but a small part of the work performed; much is of a nature that cannot well be reported in tabulated form. In the report of buildings inspected only buildings where orders have been given or changes recommended are included. Many other buildings where no changes have been required have been inspected.

Considerable time has been spent in consultation with committees,

Digitized by Google

owners of buildings, architects, heating and ventilating engineers, and in the examination of plans and specifications of buildings and heating and ventilating appliances; also in suggesting changes in plans which are brought for inspection before being filed.

The testing of heating and ventilation of school and other public buildings also requires much of an inspector's time. Often several plans for the same building will be presented for examination, while only one will be filed.

Visits to buildings in process of construction are frequently made, to see that the requirements of law and the department are complied with. Several visits are sometimes required to be made to buildings where orders have been given, in order to secure compliance with the inspector's order. Buildings reported unsafe require specially careful inspection. Correspondence with owners and others takes more or less of the inspector's time.

In some cases architects and owners have delayed filing plans and specifications at the proper time. In but one case this year have I been obliged to bring a party before the court for not filing the plans and specifications, although in several cases the parties have been notified of their liability, and plans were filed before prosecution. If owners would see that plans are properly filed and the written approval of the inspector obtained before contracts were signed or work commenced, they would often save expense in making changes afterwards.

It has come to my knowledge that in some cases it has been represented to owners that plans have been approved by the inspector, when he has never seen them; and when orders have been given for changes, the owner has expressed surprise, supposing everything had been found satisfactory and the inspector's approval given. A written approval is given where plans are satisfactory. If plans are submitted for inspection before the finished drawings are made, architects and engineers will frequently save themselves the trouble of making changes in the finished plans. Committees who fail to get the approval of the inspector before work is commenced on a public building are sometimes obliged to overrun their appropriation in order to provide what is required by law. Had plans been submitted before contracts were signed, expense could have been saved and the building not exceeded in cost what was appropriated for that purpose.

I have withheld approval of some plans where the heating and ventilation have not been or would not be guaranteed by the contractors or engineers. With the present knowledge of methods of heating and ventilating public buildings, there appears to be no good reason why the requirements of "Form No. 83" of this de-

Digitized by Google

partment cannot be met in a properly designed and constructed system. A guarantee or bond is generally given by contractors who have confidence their work will be as represented. When either an engineer or contractor refuses to guarantee his work, it may be suspected that something is not up to the standard. A good and sufficient bond is likely to secure as good results as if the professional reputation of the designer or constructor is the only guarantee given.

Report of Buildings Inspected.

CLASS No. 1, DISTRICTS Nos. 2, 3 AND 6. JOSEPH A. MOORE, *Inspector.*

NAME OF BUILDING.	Orders Given.	Compliances.
Attleborough.		
Bates' block,	Fire-escapes; fire and smoke stops; better means to lower asbestos curtain.	Complied.
I. O. O. F. building,	Additional fire-stops; means to extinguish fire.	Complied.
Avon.		
Littlefield school,	Better sanitaries,	Complied.
Canton.		
Unitarian parish house,	Doors to open out,	Complied.
Dedham.		
G. A. R. hall,	Strengthen building; remove combustible material; open doors out; better egress; means to extinguish fire.	Complied.
Edgartown.		
North school,	Better and additional egress; doors to open out.	Complied.
High and grammar school,	Better and additional egress; doors to open out.	Complied.
E. R. Morton's building,	Better egress; doors to open out,	Complied.
Fall River.		
S. P. Winslow's school,	Doors to open out,	Complied.
Casto theatre,	Better and additional egress; fasten chairs.	Complied.
Jennings' block,	Remove obstructions on rear stairs,	Complied.
Parlor theatre,	Doors to open out; limit number attending.	Complied.
Bijou musee,	Widen exit; limit number attending,	Complied.
Nickelodeon,	Change and widen doors; limit number attending.	Complied.
Globe Cycle club,	Fire-escape,	Complied.
Y. M. P. T. A. and B. society building.	Protect wood near steam pipes; change or remove gallery doors.	Complied.
Holbrook.		
Town hall,	Protect wood near steam pipes,	-
Knights of Phythias hall,	Additional egress; doors to open out,	Complied.
Golden Cross hall,	Additional egress,	Complied.
Hyannis.		
State normal school,	Special report,	-
Hyde Park.		
Estes' block,	Better and additional egress; doors to open out; means to extinguish fire.	Complied.
French's block,	Better and additional egress,	Complied.
Everett hall block,	Better egress; doors to open out; means to extinguish fire.	Complied.
Dyer's block,	Means to extinguish fire,	Complied.
Neponset hall building,	Better and additional egress; means to extinguish fire.	Complied.
I. O. O. F. hall,	Means to extinguish fire,	Complied.

Digitized by Google

Report of Buildings Inspected — Concluded.

Name of Building.	Orders Given.	Compliances.
Milton.		
Associates' building,	Asbestos curtain for stage; means to extinguish fire.	Complied.
Milford.		
Parochial school,	Protect wood work over boiler and around steam pipes. Additional egress.	Complied.
Parish house, Trinity parish,	Protect wood work over boiler and around steam pipes. Additional egress from gallery.	Complied.
Nantucket.		
Masonic building,	Fire-escape; doors to open out; means to extinguish fire.	Complied in part.
I. O. O. F. building,	Doors to open out,	Complied.
Newton.		
Nonantum building,	Designate way to fire-escape. Limit number of persons allowed in hall.	Complied.
Nickerson's block,	Change door to open out; mark exit; remove obstructions in rear exit.	Complied.
New Bedford.		
John Duff's block,	Fire escape; better ventilation; means to extinguish fire.	Complied.
Globe building,	Additional and fire-proof stairway; doors to open out; fire-proof around stage and stairways; fire resisting curtain; means to extinguish fire.	Discontinued use as a theatre.
Quincy.		
Quincy music hall,	Better and additional egress; better fire protection on stage; means to extinguish fire.	Complied.
Y. M. C. A. hall,	Better and additional egress; doors to open out; designate exits; means to extinguish fire.	Complied.
Adams block,	Doors to open out; protect wood work near steam pipes; means to extinguish fire; better ventilation.	Complied in part.
Somerset.		
I. O. O. F. building,	Fire-escape,	Complied.
Music hall building,	Fire-escape; doors to open out; rail stairs; sanitaries.	Complied.
Stoughton.		
Stretton block,	Means to extinguish fire,	Complied.
Taunton.		
Salvation army hall,	Additional and better egress; door to open out; remove oil tank from stairway.	Complied.
Upton.		
High school,	Additional galvanized iron vent duct; remove oil from under stairs.	Complied.
Weymouth.		
Washington hall,	Fire escape; smoke stop door; doors to open out; means to extinguish fire.	Use as public hall discontinued.
Clapp's hall,	Additional egress; smoke stop doors; means to extinguish fire; protect wood work near steam pipes.	In process.
Masonic building,	Fire-escape; doors to open out; means to extinguish fire.	Complied.
Temple of Honor hall,	Fire-escape; means to extinguish fire; doors to open out.	Complied.
Lovell cycle club,	Additional egress; means to extinguish fire.	Use for club rooms discontinued.
G. A. R. hall,	Additional egress; doors to open out,	–
Bicknell building,	Additional egress; doors to open out,	Complied in part.
Reform club hall,	Fire-escape,	Complied.

Digitized by Google

Plans Received and Changes Recommended.

DISTRICTS NOS. 2, 3 AND 6. JOSEPH A. MOORE, *Inspector.*

BUILDING.	Location.	Changes Recommended.
Pleasant Street school,	Attleborough,	Guarantee of ventilation.
Fire engine house,	Attleborough,	Fire stops; change in ventilation.
Union hall,	Barnstable,	Plans not approved.
Harvard Street school,	Brookline,	Guarantee of ventilation.
Grammar school,	Brookline,	Guarantee of ventilation.
Engine house,	Brookline,	Guarantee of ventilation.
S. S. Pierce building,	Brookline,	Widen rear stairs; guarantee of ventilation.
Police station and court room,	Brookline,	Guarantee of ventilation.
Steadman hospitals (two buildings),	Brookline,	Fire stops; additional egress.
Christian Endeavor chapel,	Dartmouth,	Doors to open out; change in ventilation.
Almshouse,	Dedham,	Guarantee of ventilation.
Woods Holl yacht club house,	Falmouth,	No approval given.
Hicks Street school,	Fall River,	Guarantee of ventilation.
United Presbyterian chapel,	Fall River,	Guarantee of ventilation.
Brayton Avenue school,	Fall River,	Guarantee of ventilation.
Bristol County jail and house of correction.	Fall River,	Changes in heating and ventilation.
J. R. Leary's building,	Fall River.	Widen doors.
Casto theatre (alterations),	Fall River,	–
Fire engine house,	Fall River,	Guarantee of ventilation.
Jennings block (alterations),	Fall River,	–
Janitor's home, St. Joseph's Orphanage.	Fall River,	–
Four-room school,	Framingham (So.),	Fire stops; guarantee of ventilation.
St. Andrew's chapel,	Framingham (So.),	No approval given.
St. Paul's church,	Hopkinton,	Ventilation not approved; fire stops.
G. B. Lewis' building (I. O. O. F. hall).	Hyannis,	Fire stops; additional egress; doors changed; ventilation.
G. F. Estes building (hall),	Hyde Park,	Fire escape; no approval given.
L. J. French's block (halls),	Hyde Park,	Fire escape; fire stops; change in ventilation.
Bleakie's hall,	Hyde Park,	No approval given.
Public library,	Hyde Park,	Fire escape; change in ventilation.
Insane asylum industrial building,	Medway,	Additional door in second story.
Almshouse,	Medway,	Fire stops and doors, guarantee of ventilation.
Union church,	Mendon,	Fire stops; ventilation not approved.
First Universalist church,	Milford,	Additional egress; fire stops; ventilation.
Belcher school (addition)	Milton,	Doors to open out; guarantee of ventilation.
Brush Hill school,	Milton,	Plans not approved; additional stairway; fire stops; doors to open out.

Digitized by Google

Plans Received, etc. — Concluded.

Building.	Location.	Changes Recommended.
Newton hospital (4 buildings),	Newton,	Guarantee of ventilation.
Methodist Episcopal church,	Newton,	Additional egress; fire-stops; change in ventilation.
Circuit building,	Newton,	No approval given; fire-escape; change doors.
Orphans' home,	New Bedford,	Guarantee of ventilation.
Police station and ward room,	New Bedford,	Change in ventilation.
H. M. Blackman's building,	New Bedford,	Widen and rail stairway; doors to open out; ventilation.
Portuguese chapel,	New Bedford,	No approval given.
J. W. Cornell building,	New Bedford,	Fire-stops; ventilation; means to extinguish fire.
Globe building (alteration to theatre).	New Bedford,	Plan disapproved.
Ahabath Achin church,	New Bedford,	Fire-stops and ventilation.
First United Presbyterian church,	Quincy.	Fire-stops; guarantee of ventilation.
First Baptist church,	Randolph,	Additional egress; guarantee of ventilation.
Rock Bottom school,	Stow,	Fire-stops; guarantee of ventilation.
Gleason memorial church,	Stow,	Fire-stops; change in ventilation.
Washington primary school (alterations).	Taunton,	- -
Congregational church,	Taunton,	Guarantee of ventilation.
East Taunton fire and police station,	Taunton,	Change of ventilation; additional egress from second story if used for ward room.
Village school (addition),	Walpole,	Change in ventilation.
North Building for Mass. School for Feeble-minded.	Waltham,	- -
South Building for Mass. School for Feeble-minded.	Waltham,	- -
Winthrop Street grammar school,	Watertown,	Guarantee of ventilation.
First Baptist church,	Watertown,	Guarantee of ventilation.
Houghton memorial chapel,	Wellesley,	- -
Union church,	Weymouth,	Fire-stops; change in ventilation.
Plainville school,	Wrentham,	Guarantee of ventilation.

Report of Inspector Brown.

Sir: — I have the honor to submit a tabulated report for the past year of the plans of buildings received, including the changes required before approving them, together with such buildings inspected where orders have been given for necessary improvements to secure the safety of employees and occupants as authorized by the statutes.

The work being much the same as in previous years, it is useless to go over it in detail. The usual number of inspections have been made, and it is gratifying that, of the many inspections, so

Digitized by Google

comparatively few orders were necessary to bring them all up to the requirements of the several laws. The owners promptly recognize the propriety of the orders and willingly comply with them, and it is only fair to say that in most cases it was owing to a lack of knowledge that any improvement was needed that rendered any order necessary, otherwise it would have been provided without waiting to have it pointed out by the inspector.

In one case, however, the selectmen of a town represented an unoccupied building to be unsafe, and requested a special inspection. By your order the building was thoroughly examined, and found to be dangerous and unsafe. The owner, after due notice, neglecting to make it safe, it then became my duty to attend to it; and, after complying with the formalities of the statutes governing such proceedings, I caused the building to be shoved up, braced and made secure. This is the first instance of the kind which I have had in my eleven years' service as an inspector. Aside from this, my official relations have been friendly and pleasant with all interested.

Plans Received and Changes Recommended.

DISTRICT No. 4. EDWIN Y. BROWN, *Inspector.*

Building.	Location.	Changes Recommended.
Bridgewater Shoe Co.'s factory,	Bridgewater,	Additional ways of egress.
George F. Snow's shoe factory,	Brockton,	- -
Edwin Keith's factory (addition to),	Brockton,	Fire-stops.
S. E. Packard's factory (addition to),	Brockton,	Fire-proofing.
Preston B. Keith's factory (addition to).	Brockton,	- -
Church of Christ,	Brockton,	Better ways of egress.
Park street school-house (ventilation of).	Brockton,	- -
W. L. Douglass Shoe Co.'s factory (addition to).	Brockton,	- -
Mrs. Martin's tenement block,	Chelsea,	- -
The Wheeler, apartment block,	Chelsea,	Fire-proofing; fire-stops.
Chelsea police court building,	Chelsea,	- -
Savings bank building,	Cohasset,	Additional stairway.
Public library,	Kingston,	Metal air ducts.
School-house,	Mattapoisett,	Better ways of egress.
Russell building,	Plymouth,	Fire-proof stairway; fire-stops.
State bath house,	Revere,	- -
Baptist church (addition to),	Revere,	- -
Chapel,	Revere,	Fire-stops.
The Cleveland (hotel),	Revere,	Additional ways of egress; fire-stops.

Digitized by Google

Plans Received, etc. — Concluded.

Building.	Location.	Changes Recommended.
School-house (addition to),	Rockland,	- -
Everson's block,	Whitman,	Fire-proofing; fire-stops.
Lewis' building,	Winthrop,	Fire-proofing.
Frost library building,	Winthrop,	- -
Winthrop Beach school-house (addition to).	Winthrop,	Better ventilation.
Almont school-house (addition to),	Winthrop,	Additional ways of egress.
Fire department headquarters,	Winthrop,	- -
Darlow's block,	Winthrop,	Fire-proofing; fire-stops.

Report of Buildings Inspected.

Class No. 1, District No. 4. EDWIN Y. BROWN, *Inspector*.

Name of Building.	Orders Given.	Compliances.
Brockton.		
Satucket block,	For additional sanitary arrangements,	Complied.
Thompson's factory building, No. 1,	For fire-escape,	Complied.
Thompson's factory building, No. 2,	For fire-escape,	Complied.
Baxendale's factory (Cobb estate),	For fire-escape,	Complied.
Marshall's factory building,	For fire-escape, and connecting doors with glass panels.	Complied.
Kinney's block,	For rope fire-escapes in lodging rooms,	-
Park Street school-house,	For ventilation,	Complied.
T. D. Barry's factory building,	For fire-escape,	Complied.
Chelsea.		
Gerrish block,	To improve the ways of egress, and provide means to extinguish fire.	Complied.
Emery's building,	For additional ways of egress,	Complied.
Central house,	For rope fire-escapes, and means to extinguish fire.	-
Hull.		
Montasco house,	Inspected at the request of the selectmen; building found in a dangerous condition and owner was ordered to make it secure; neglected to comply, and building made safe by the inspector.	-
Middleborough.		
Alden & Co.'s factory building,	For fire-escape,	Complied.
Keith & Pratt's factory building,	For fire-escape,	Complied.
Plymouth.		
Central house,	For rope fire-escapes in lodging rooms,	Complied.
Old Colony house,	For rope fire-escapes in lodging rooms,	Complied.
Columbus pavilion,	For rope fire-escapes in lodging rooms,	Complied.
The Elms (summer boarding house),	For rope fire-escapes in lodging rooms,	-
Revere.		
The Franklin (tenement block),	For a fire escape at each end of building.	Complied.
Boston Institute Seashore Home,	For fire-escape,	-*
Central house,	For rope fire-escapes in lodging rooms,	Complied.
Russell house,	For rope fire-escapes in lodging rooms,	Complied.
Scituate.		
Hotel Humarock,	To repair fire-escape,	Complied.
Centennial house,	For rope fire-escapes in lodging rooms,	-

* Building closed.

Digitized by Google

Report of Buildings Inspected— Concluded.

Name of Building.	Orders Given.	Compliances.
Whitman.		
Hotel Grandon, ...	For rope fire-escapes in lodging rooms,	Complied.
Winthrop.		
The Bartlett, ...	For rope fire-escapes in lodging rooms,	Complied.

Report of Inspector Dyson.

Sir: — In compliance with your orders, I have the honor to submit the following report of part of the work performed by me during the past year, tabulated as far as possible.

In the list of buildings inspected only those where orders were given are included. In the list of plans received the report in many cases shows but a small part of the work performed. Sketches or preliminary plans are submitted by architects and builders, all of which take the time of the inspector, and recommendations as to changes in construction, safety against fire and ventilation are generally drafted into the final plans. In most cases said changes have been promptly complied with. Early in the year the Front Street Theatre in Worcester was destroyed by fire, fortunately soon after the evening performance, and has been rebuilt fully in accordance with the provisions of chapter 382 of the Acts of the year 1894. Audience hall and stage are on the second floor, with but one gallery, and provided with five independent fire-proof exits to the street; stairways constructed of cement in brick shafts from the basement floor providing 40 inches of stair surface for each 100 seats; stage provided with stand-pipe and hose with sprinkler service over stage scenery.

By the request of the selectmen of the town of Southbridge, the town hall was inspected as to its safety. It was found that the trusses carrying the roof and the southerly wall were in bad condition. Recommendations were made, and a request that I should take charge of the work, all of which was done satisfactorily to the officers and citizens of said town, at an expense of about $2,800.

February 16 the rear wall of the Clinton Opera House was blown inward, practically wrecking the building. The selectmen of the town and the owners of the building requested of you the State's supervision of its reconstruction, and in compliance with your orders I superintended the work, using heavy steel columns in its

Digitized by Google

reconstruction, anchored the walls to the several floors, trusses braced and anchored, all of which was done satisfactorily to the owners and the public as to its safety in the future. Many opinions were given as to the cause of this disaster, which was fortunately without loss of life or limb; but there is no doubt as to the cause, — the walls had been but recently built, the mortar not having become hard or set in middle of wall, and resulted during a heavy gale in its destruction.

Plans Received and Changes Recommended.

DISTRICT NO. 5. JOSEPH M. DYSON, *Inspector.*

BUILDING.	Location.	Changes Recommended.
Clinton opera house,	Clinton,	Location and size of ducts for removing foul air.
Canterbury Street school,	Worcester,	Change in ventilation.
East Douglas grammar school,	East Douglas,	Fire-stops and egress.
Universalist church,	Leominster,	Doors to open out.
First evangelical church,	Clinton,	None.
Whitney Co. shop,	Leominster,	Additional egress.
Lowell's mercantile building,	Worcester,	None.
Grammar school,	Paxton,	Ventilation and guarantee.
Smith's block,	Worcester,	Fire-stops.
Exhibition hall,	Sturbridge,	Additional egress and stay rods.
Diamond Match Co. factory,	Athol,	None.
Congregational church,	Whitinsville,	None.
A. Israel's factory,	Worcester,	Stairs to be 1 foot wider.
Addition to No. 2 mill,	Manchaug,	None.
St. Vincent's hospital,	Worcester,	Fire-stops.
Addition to Ward Street school,	Worcester,	None.
Harlow Street school,	Worcester,	None.
Clinton opera house seating plan,	Clinton,	None.
School Holy Name of Jesus,	Worcester,	Wider stairs; fire-stops; extra bolts to trusses.
J. Miles & Son apartment house,	Worcester,	Fire-stops.
Ward building,	Leominster,	Fire-stops each story.
The Irving apartment block,	Worcester,	Fire-stops on stairs; stairs to be 18 inches wider.
Swedish Lutheran church,	Worcester,	Main entrance to be 1 foot wider.
Ventilation of hospital for acute patients.	Westborough,	Ventilation ducts enlarged.
Worcester County court house,	Worcester,	Ventilation ducts enlarged and location changed.
Grammar school,	Manchaug,	Additional means of egress.
Odd Fellows hall,	Whitinsville,	Additional means of egress.
Ventilation of court house,	Worcester,	Mechanical system.

Digitized by Google

Plans Received, etc. — Concluded.

Building.	Location.	Changes Recommended.
Flagg Street grammar school,	Clinton,	Fire-stops.
Hall's apartment block,	Worcester,	None.
Main Street grammar school,	Worcester,	None.
Public building,	Rutland,	Additional egress and ventilation.
Addition to Gage Street school,	Worcester,	None.
Old People's Home,	Worcester,	Doors to open out and ventilation.
Heating and ventilation school,	Manchaug,	Enlarged ducts.
Heating and ventilation of addition to hospital.	Worcester,	Location of ducts.
Park Square theatre,	Worcester,	Additional means of egress and ventilation.
Grammar school,	Webster,	Additional ventilation.
F. A. Daniels' block alterations,	Worcester,	None.
King's hotel,	Shrewsbury,	Fire-stops and additional egress.
Buckingham apartment block,	Worcester,	None.
Worcester brewery,	Worcester,	None.
Daniels' block,	Worcester,	None.
Dwight-Foster building,	Worcester,	Plans not approved.

Report of Buildings Inspected.

Class No. 1, District No. 5. JOSEPH M. DYSON, *Inspector*.

Name of Building.	Orders Given.	Compliances.
Southbridge.		
Notre Dame parochial school,	Tower stairs, ventilation and sanitaries.	Complied.
Notre Dame church,	Doors to open out,	Complied.
Town hall,	Trusses strengthened and tie rods to outer walls.	Complied.
Worcester.		
Worcester Mutual Fire Insurance Co. building.	Outside fire-escape,	-*
St. Anne's Orphan Asylum,	Outside fire-escape,	Not complied.
Goddard, Fay & Stone's factory,	Improve sanitaries,	Complied.
Froshin hall,	Outside fire-escape; forbid use of upper hall.	Complied.
Sutton.		
Manchaug Catholic church,	Additional egress from galleries,	Complied.
Parochial school,	Ventilation,	Complied.
Grammar school,	Ventilation,	Complied.
Leicester.		
Centre brick school,	Improved sanitaries,	Complied.
Westborough.		
High school,	Additional ventilation,	Complied.
Rutland.		
High school,	Ventilation and sanitaries,	-†
Grammar school,	Ventilation and sanitaries,	-†
Holden.		
Grammar school,	Ventilation,	Complied.

* Pending, floor not yet occupied. † New building now being constructed.

Digitized by Google

Report of Inspector Foulds.

Sir: — I have the honor to submit herewith a tabulated report of the work done by me in the inspection of public buildings in District No. 6 during the past year.

In making this report, it will be noticed there is a large falling off in the number of new buildings, both those for business purposes and tenement-houses, constructed in this district the past year, as compared to that of previous years. The apparent reason for this seems to be owing to the depression of business and a large surplus of tenements.

A large number of the plans received are for tenement-houses, which plans have mostly been drawn by owners or contractors, who are not aware of the laws governing the erection of this class of buildings; and it becomes necessary for the inspector to devote considerable time, while the buildings are in course of construction, to see that the provisions of section 25, chapter 481 of the Acts of 1894 are complied with. To this work I have given my special attention.

Under the provisions of section 35 of the above chapter and act, I have carefully inspected a large number of hotels, boarding and tenement houses in this district; and, where such buildings have not already been provided with sufficient means of egress or means of extinguishing fire, I have issued the necessary orders. In most cases they have been promptly complied with. Those that have not been complied with are mostly in summer hotels, and the orders will be complied with before opening for the season of 1899.

During the past year I have visited the different theatres and places of assemblage in this district, and am pleased to state that no complaints have been made as to seats and aisles or of overcrowding, and believe the managers in general are complying with the provisions of section 24, chapter 481.

In conclusion, would say most of the orders issued by me have been promptly and cheerfully complied with.

Plans Received and Changes Recommended.

District No. 6. JOHN E. FOULDS, *Inspector.*

Building.	Location.	Changes Recommended.
Crocker house, addition, . . .	Barnstable, . .	Additional egress; fire-stops; means of extinguishing fire.
Golfers inn, ...	Barnstable, . .	Fire-escape; fire-stops.
Harbor View house, addition, . .	Edgartown, . .	Rail jet fire-stops; fire-escape.

Digitized by Google

Plans Received, etc. — Concluded.

Building.	Location.	Changes Recommended.
Gabbott tenement house,	Fall River,	No change.
Fearnly building,	Fall River,	Additional egress; fire-stops.
Barash tenement house,	Fall River,	Fire-stops.
Hurst block,	Fall River,	Fire-stops.
Hurst block No. 2,	Fall River,	Fire-stops.
Hoy building,	Fall River,	Means of extinguishing fire.
Gabbott tenement house,	Fall River,	Fire-stops.
Sullivan tenement house,	Fall River,	Fire-escape; fire-stops.
Westwell tenement house,	Fall River,	Fire-stops.
Martel block,	Fall River,	Fire-escape.
Pocasset hat factory,	Fall River,	Fire-escape; metal shaft.
Dandelin tenement house,	Fall River,	No change.
Hurst block No. 3,	Fall River,	Fire-stops.
Desjardins block,	Fall River,	Fire-stops.
Giroux block,	Fall River,	Fire-stops.
Guevremont block,	Fall River,	Fire-stops.
Guinney tenement house,	Fall River,	Fire-stops.
O'Hearn tenement house,	Fall River,	Additional means of egress.
Aldrich tenement house,	Fall River,	Additional egress; fire-stops.
Trepanier block,	Fall River,	Fire-escape.
Zimmer block,	Fall River,	Fire-stops.
Vandal tenement house,	Fall River,	Fire-escape; fire-stops.
Warren block addition,	Fall River,	Brick up stairs.
Baillie building,	Fall River,	No change.
Wing building addition,	New Bedford,	Additional egress.
Poirrier tenement house,	New Bedford,	Fire-stops.
Mongeau building,	New Bedford,	Fire-stops.
Francis building,	New Bedford,	Fire-stops.
Hickey building,	New Bedford,	Fire-stops.
Bartlett's block,	New Bedford,	Brick up stairs in stores.
Poole Silver Co.,	Taunton,	Additional stairs; doors to open out.
Murphy building,	Taunton,	Fire-escape; fire-stops.

Digitized by Google

Report of Buildings Inspected.

CLASS No. 1, DISTRICT No. 6. JOHN E. FOULDS, *Inspector.*

NAME OF BUILDING.	Orders Given.	Compliances.
Attleborough.		
Bates' block,	None,	-
Briggs' house,	None,	-
Simpson house,	Means of extinguishing fire,	Complied.
Park hotel,	Electric gongs; red lights; portable fire-escapes.	Complied.
Central house,	None,	-
Chilson house,	None,	-
Holman block,	Means of extinguishing fire; remove obstructions from hallways.	Complied.
Barnstable.		
Barnstable inn,	None,	-
Hotel Pines,	None,	-
Santuit house,	Means of extinguishing fire,	Complied.
Crosby house,	None,	-
Golfer's inn,	None,	-
Squirrel inn,	None,	-
Pine cottage,	Means of extinguishing fire; portable fire-escapes.	Complied.
Cotochessett house,	None,	-
Iyanough house,	None,	-
Hallett house,	None,	-
Port View hotel,	None,	-
Ye annex,	None,	-
Chequaquett inn,	None,	-
East Bay lodge,	None,	-
Bourne.		
Monument Beach house,	Means of extinguishing fire; portable fire-escapes.	Complied.
Manomet house,	Means of extinguishing fire; portable fire escapes.	Complied.
Parker house,	Means of extinguishing fire; portable fire-escapes.	Complied.
Cottage City.		
Searell hotel,	Repair fire-escapes,	Complied.
Pawnee house,	None,	-
Eastville inn,	Means of extinguishing fire; portable fire-escapes.	Complied.
Metropolitan hotel,	None,	-
Cottage City house,	None,	-
The Oakwood,	None,	-
Wesley house,	None,	-
Central house,	None,	-
Island house,	None,	-
Naumkeag house,	None,	-
Vineyard Grove house,	Portable fire-escapes,	Complied.
Frasier house,	None,	-
Wesley house annex,	None,	-
Chatham.		
Dill house,	None,	-
Monomoyoh inn,	Means of extinguishing fire; portable fire-escapes.	Complied.
Ocean house,	None,	-
Dennis.		
Nobescussett house,	Means of extinguishing fire,	Complied.
Edgartown.		
Harbor View house,	None,	-
Sea View house,	None,	-
Old Hall house,	None,	-
Fall River.		
Stafford mills, No. 1,	Doors to open out,	Complied.
Stafford mills, No. 2,	None,	-
Giroux tenement house,	None,	-
Granite block,	Extend fire-escapes,	Complied.
Central police station,	Reported to Inspector Moore,	-
Harrington block,	None,	-

Digitized by Google

Report of Buildings Inspected — Continued.

Name of Building.	Orders Given.	Compliances.
Fall River — Con.		
McMahon tenement house, No. 1,	None,	-
McMahon tenement house, No. 2,	None,	-
Couturier tenement house, No. 1,	Better means of egress,	Complied.
Couturier tenement house, No. 2,	Better means of egress,	Complied.
Zoussemanovitch tenement house,	Additional means of egress,	Complied.
Martin tenement house,	Additional means of egress,	Complied.
Maltais tenement house,	Remove obstructions from doors,	Complied.
Gillett tenement house,	None,	-
Lavoie tenement house, No. 1,	Better means of egress,	Complied.
Ouellette tenement house,	None,	-
Lavoie tenement house, No. 2,	Better means of egress,	Complied.
Lavoie tenement house, No. 3,	Better means of egress,	Complied.
Picard tenement house,	Outside fire-escapes and remove obstructions from hall.	Complied.
Lafond block,	None,	-
Desforges building,	Better means of egress,	Complied.
Vaillancourt building,	Better means of egress,	Complied.
Vaillancourt building,	Better means of egress,	Complied.
Amiot tenement house,	Better means of egress,	Complied.
Roes tenement house,	None,	-
Filion tenement house,	Remove obstructions from doors and better means of egress.	Complied.
Fortin tenement house,	Better means of egress,	Complied.
Dansereau block,	Better means of egress,	Complied.
Gillett tenement house,	None,	-
Mitchell block,	Outside fire-escapes and doors in partition.	Complied.
Travis block,	None,	-
Gagne tenement house,	Better means of egress,	Complied.
Caza tenement house,	Better means of egress,	Complied.
Benoit block,	Better means of egress,	Complied.
Flynn block,	None,	-
Clark block, No. 1,	None,	-
Clark block, No. 2,	None,	-
Splaine tenement house,	None,	-
Hurdle tenement house,	None,	-
Smith block,	None,	-
Smith tenement house,	None,	-
Yamin's block, No. 1,	Remove obstructions to doors,	Complied.
Yamin's block, No. 2,	Remove obstructions to doors.	Complied.
Eagan's block,	None,	-
Gagne block,	None,	-
Lavoie block,	Better means of egress,	Complied.
Menaud block,	None,	-
Barash block,	Better means of egress; remove inflammable matter from halls.	Complied.
Larkin tenement house,	None,	-
Winstanley block,	Outside fire-escapes and cut doorways.	Complied.
Baron block,	Outside fire-escape and cut doorways.	In course of compliance.
Alpert block,	Additional means of egress,	Complied.
Flink block,	None,	-
Levine block,	None,	-
Barrett block,	Outside fire-escape,	Complied.
Nicholson block, No. 1,	None,	-
Nicholson block, No. 2,	None,	-
Hurley block,	None,	-
Roach tenement house,	None,	-
Janson tenement house,	Additional means of egress,	Complied.
Scholchetman house,	None,	-
Nichols building,	Extend and repair fire-escapes,	Complied.
Winarsky block,	None,	-
Welde block,	None,	-
Shon block,	Additional means of egress,	Complied.
Clarke tenement house,	None,	-
Connors block,	None,	-
Brennan block,	None,	-
Ouellette block,	Better means of egress,	Complied.
Boucher tenement house,	Better means of egress,	Complied.
Moss tenement house,	None,	-
Kennedy tenement house,	Additional means of egress,	Complied.

Digitized by Google

Report of Buildings Inspected — Continued.

Name of Building.	Orders Given.	Compliances.
Fall River — Con.		
Dupont tenement house,	Better means of egress,	Complied.
Michaud block,	Better means of egress,	Complied.
Flint building,	Doors to open out; means to extinguish fires.	Complied.
American Printing Co.,	Tower doors to open out,	Will comply.
Martin block,	None,	–
Fogarty block,	Additional stairway,	Complied.
Honers block,	None,	–
Harding block,	None,	–
Moran block,	None,	–
Kenney block,	Additional means of egress,	Complied.
Phelan block,	Outside fire-escape; cut windows down.	Complied.
Hawkins building,	Doors to open out,	Vacated.
Levine block,	Outside fire-escape,	Complied.
Cox block,	Doors to open out,	Complied.
Ryley block,	None,	–
O'Brien block, No. 1,	None,	–
O'Brien block, No. 2,	Dormer window; outside fire-escape,	Complied.
Wexler block,	Dormer windows; fire-escape; cut doors.	Complied.
Connellys block,	Means of extinguishing fire; repair outside fire-escapes.	Complied.
Gagne block, No. 1,	Remove obstruction to stairs,	Complied.
Gagne block, No. 2,	Extend and repair fire-escapes,	Complied.
Gagne block, No. 3,	Extend and repair fire-escapes,	Complied.
Levesque block,	None,	–
Gaynen block,	Outside fire-escape,	Complied.
Caron block,	Better means of egress,	Complied.
Clarke block,	None,	–
Moss building,	None,	–
Simon block,	None,	–
Ploude block,	None,	–
City hotel,	None,	–
Ye tavern,	None,	–
St. James' hotel,	None,	–
Narragansett house,	None,	–
Evans house,	None,	–
The Wilbur,	None,	–
Mellen house,	None,	–
Hawkins house,	None,	–
Davis block,	None,	–
Richardson house,	Red lights; portable fire-escapes,	Complied.
Puritan house,	None,	–
Gifford house,	None,	–
Ryan house,	None,	–
Claflin house,	None,	–
Berard block,	Additional means of egress,	Complied.
Guay block,	Additional means of egress,	Complied.
McKinley house,	None,	–
Farrell block,	Outside fire-escape; dormer windows; cut doorways.	Complied.
Harrington block,	Outside fire-escape; cut doorways,	Complied.
Dube block,	Better means of egress,	Complied.
Masse block,	None,	–
West block,	None,	–
Dunn block,	Remove obstructions from hall; put up new stairs; means of extinguishing fire.	Complied.
Rouillard block,	Extend and repair fire-escape,	Not complied.
Palmer block,	None,	–
Live and let live house,	Outside fire-escape; cut doorways,	Complied.
Benoit block,	None,	–
Ledoux tenement house,	None,	–
Stewartson block,	Additional means of egress,	Complied.
Plumb block,	None,	–
Mills block, No. 1,	Better means of egress,	Complied.
Mills block, No. 2,	Better means of egress,	Complied.
Union Belt Co.,	Outside fire-escapes,	Will comply.
Dandelin block,	None,	–

Digitized by Google

Report of Buildings Inspected—Continued.

Name of Building.	Orders Given.	Compliances.
Falmouth.		
Vineyard Sound house,	Portable fire-escapes,	Complied.
Craig house,	None,	-
Tower house,	Put gongs in working order; means of extinguishing fire.	Complied.
Hotel Falmouth,	Better means of egress; means to extinguish fire; portable fire-escapes.	Part complied.
Hotel Nobska,	None,	-
Dexta house,	None,	-
Harwich.		
Snow inn,	Change hooks; put in new portable fire-escapes; means of extinguishing fire.	Complied.
Belmont house,	Portable fire-escapes,	Complied.
Mansfield.		
Mansfield house,	None,	-
Central house,	Means of extinguishing fire,	Complied.
American house,	None,	-
North Attleborough.		
International hotel,	None,	-
Central house,	Portable fire-escapes; means of extinguishing fire.	Complied.
Wamsutta house,	None,	-
Boyle block,	Reported to Inspector Moore,	-
Nantucket.		
Springfield house,	None,	-
Springfield house annex, No. 1,	None,	-
Springfield house annex, No. 2,	None,	-
Ocean house,	Rail balcony and stairs to fire-escape; means to extinguish fire.	Complied.
Holiday inn,	None,	-
Sea Cliff inn,	None,	-
Veranda house,	None,	-
Island Home house,	None,	-
The Point Breeze,	None,	-
The Gables,	None,	-
Sherborn house,	None,	-
New Bedford.		
Denham shirt factory,	Doors to open out; move obstruction on stairs; guard steam-pipes.	Complied.
Tilton tenement house,	None,	-
Ricard tenement house,	None,	-
Taylor tenement house,	None,	-
Therein tenement house,	None,	-
Tremblay tenement house,	None,	-
Gibbs building,	None,	-
Hughes block,	None,	-
Berard block,	None,	-
McDonald block,	None,	-
Mansion house,	Put in electric gongs; change hooks; put in portable fire-escapes; means of extinguishing fire.	Complied.
Parker house,	Unlock doors; same to open out; put gongs in working order; portable fire-escapes.	Complied.
Winthrop house,	None,	-
Bristol house,	None,	-
Park hotel,	Portable fire-escapes,	Complied.
Sheriden house,	None,	-
Whitman house,	None,	-
Manhattan house,	Guard steam-pipes and put in new portable fire-escapes.	Complied.

Digitized by Google

Report of Buildings Inspected — Concluded.

Name of Building.	Orders Given.	Compliances.
New Bedford — Con.		
Whitcomb house,	None,	-
Parker house, jr.,	None,	-
Orleans.		
Shattuck house,	None,	-
Provincetown.		
Central house,	None,	-
Pilgrim house,	None,	-
Gifford house,	Rail stairs and balcony to fire-escapes; also jet to roof.	Complied.
Atlantic house,	None,	-
Tisbury.		
Innisfail house,	Outside and portable fire-escapes; means of extinguishing fire.	Complied.
Tashmoo house,	None,	-
Mansion house,	None,	-
Rudder grange,	None,	-
The Cedras,	Portable fire-escapes,	Will comply.
Cedras annex,	Portable fire-escapes,	Will comply.
Taunton.		
Norfolk house,	Outside fire-escapes; rail jet; means of extinguishing fire.	Complied.
King's block,	None,	-
City hotel,	Red lights; change hooks to portable fire-escapes.	Complied.
Hotel Bristol,	None,	-
Taunton house,	None,	-
Central house,	Means of extinguishing fire,	Complied.
Barber house,	None,	-
Hotel Prospect,	None,	-
Columbia house,	None,	-
Corr mill boarding house,	Rail stairs to outside balcony; means of extinguishing fire.	Complied.
Hotel Windsor,	None,	-

Report of Inspector Buxton.

Sir: — I have the honor to submit the following report of work done during the past year in District No. 7, comprising Hampden and Hampshire counties.

There has been much time spent on new construction, in order to get fire-stops and other safeguards properly placed. Unless these safeguards are properly constructed and thoroughly put in, they would be of comparatively little use, but when well done there is no doubt of their efficiency. There have also been many tenement blocks, hotels and other buildings inspected, which will not appear in this report, as there was no change necessary.

There has been a large number of important buildings completed during the year, and others are now in process of construction. The most important among those which have been completed

Digitized by Google

during this year are the Springfield high school building, which has accommodations for 800 pupils, and the Holyoke high school building, having accommodations for 1,000 pupils. Both these schools are fitted with the best modern appliances, complete in all their details, and among the best buildings of that class in the State; they are warmed and ventilated by what is known as the double mechanical system. The Springfield high school has, in addition, the Johnson's heat control and the Webster's steam exhaust system, by which the steam can be circulated throughout the building with less than one-half pound pressure at the boilers, which, in my opinion, will prove a great saving in fuel, as well as giving an even temperature throughout the building.

The law requiring that a copy of the plans and specifications of such public buildings as are mentioned in section 25, chapter 481, Acts of 1894, shall be deposited with the inspectors, has been fairly well complied with. The benefits of this law, when fully understood by the owners of such buildings, are highly appreciated.

The law requiring rope fire-escapes in hotels, lodging-houses, etc., is well complied with, although I find that in some cases these rope escapes have been removed by the parties occupying the rooms without the knowledge of the owner. Whenever such cases have been found and the attention of the proprietor has been called to it, they have been replaced at once, therefore no written notices were necessary.

In closing, I would say that I have had little trouble the past year in persuading people to comply with the provisions of those laws intrusted to me for enforcement. They are coming to be better understood year by year, and just in proportion as they come to be fully understood do the reasonableness and justice of their requirements become apparent, and compliance is cheerfully given. Indeed, many buildings in my district which do not come under the provisions of the law regarding fire-stops, escapes, etc., have been provided with them, their owners feeling that the sense of safety derived from having done all possible to prevent disaster amply paid for the cost in money.

Report of Buildings Inspected.

CLASS No. 1, DISTRICT No. 7. WARREN S. BUXTON, *Inspector.*

NAME OF BUILDING.	Orders Given.	Compliances.
Springfield.		
B. & A. R.R. Co. block, . . .	Additional means of egress, . .	In process of construction.

Digitized by Google

Plans Received and Changes Recommended.

DISTRICT NO. 7. WARREN S. BUXTON, *Inspector.*

BUILDING.	Location.	Changes Recommended.
Addition to Park View hotel, . .	Belchertown, .	Fire-stops.
Joseph R. Gould's hall, . . .	Belchertown, .	Additional egress.
Brimfield hotel, ...	Brimfield, . .	Fire-stops; additional egress.
French church, ...	Chicopee, . .	Doors open out; fire-stops.
Lavelle Bros. tenement block, . .	Chicopee, . .	Fire-stops.
Willemanset church, ...	Chicopee, . .	Fire-stops.
Enfield school, ...	Enfield, . .	Ventilation; fire-stops.
German Turne hall, ...	Easthampton, .	Fire-stops.
William Skinner's silk mill, . .	Holyoke, . .	Additional egress.
Ball & Trewargy's block, . . .	Holyoke, . .	Fire-stops.
La France & La Rivers tenement block.	Holyoke, . .	Fire-stops.
Mrs. K. Parsons tenement block, .	Holyoke, . .	Fire-stops.
National Blank Book Co. mill, .	Holyoke, . .	Additional egress.
G. Potvin & Son's tenement block, .	Holyoke, . .	Fire-stops.
J. Pollard's tenement block, . .	Holyoke, . .	Fire-stops.
La Liberte Bros. tenement block, .	Holyoke, . .	Fire-stops.
R. Garipe's tenement block, . .	Holyoke, . .	Fire-stops.
Selnor tenement block, . . .	Holyoke, . .	Fire-stops.
Smith & White M'f'g Co. factory, .	Holyoke, . .	Additional egress; fire-stops.
Holyoke almshouse, ...	Holyoke, . .	Ventilation.
John W. Prew, tenement block, .	Holyoke, . .	Fire-stops.
Holyoke canoe club house, . .	Holyoke, . .	No change.
Stetson & Son's tenement block, .	Holyoke, . .	Fire-stops.
Russell hotel, ...	Russell, . .	Fire-stops.
Mt. Holyoke college dormitory No. 2,	South Hadley, .	Fire-stops.
Mt. Holyoke college dormitory No. 3,	South Hadley, .	Fire-stops.
Mt. Holyoke college dormitory No. 4,	South Hadley, .	Fire-stops.
Mt. Holyoke college dormitory No. 5,	South Hadley, .	Fire-stops.
Administration building, . . .	South Hadley, .	Ventilation; fire-stops.
Longmeadow school, ...	Longmeadow, .	Ventilation; fire-stops.
Smith college dormitory, . . .	Northampton, .	Fire-stops.
Smith college chemical laboratory, .	Northampton, .	Ventilation.
M. L. & M. W. Graves factory, .	Northampton, .	Fire stops.
Vernon St. school, ...	Northampton, .	Ventilation; fire-stops.
P. J. Gagnie's tenement block, .	Springfield, . .	Fire-stops.
S. A. Ryan's tenement block, . .	Springfield, . .	Fire-stops.

Digitized by Google

Plans Received, etc. — Concluded.

Building.	Location.	Changes Recommended.
W. D. Kinsman's block,	Springfield,	No changes.
John C. Morse's tenement block,	Springfield,	Fire-stops.
Butterworth's tenement block,	Springfield,	Fire-stops.
Barnett Aberbach's tenement block,	Springfield,	Fire-stops.
Homer St. school,	Springfield,	Ventilation; fire-stops.
House of the Good Shepherd,	Springfield,	Additional egress; fire-stops.
Worthington St. school addition,	Springfield,	Ventilation.
Gagne & Anger's tenement block,	Springfield,	Fire-stops.
Forest Park school,	Springfield,	Ventilation; fire-stops.
P. Ange's tenement block,	Springfield,	Fire-stops.
Presbyterian church,	Springfield,	Ventilation; fire-stops.
L. C. Carr's block,	Springfield,	Additional egress; fire-stops.
Addition to Lerchea's hotel,	Springfield,	Additional egress; fire-stops.
St. Joseph's convent,	Springfield,	Fire-stops.
S. E. Seymour's block,	Springfield,	Fire-stops.
N. K. Cole's block,	Springfield,	Fire-stops.
Universalist church,	Springfield,	Ventilation; fire-stops.
Brightwood school,	Springfield,	Ventilation; fire-stops.
Alden St. school,	Springfield,	Ventilation; fire-stops.
Mercy hospital,	Springfield,	Ventilation; fire-stops.
E. Morgan's Hillman St. block,	Springfield,	Fire-stops.
Boston Road school building,	Springfield,	Ventilation; fire-stops.
S. A. Ryan's No. 2 tenement block,	Springfield,	Fire-stops.
J. B. Craige's tenement block,	Springfield,	Fire-stops.
Andrew Whitney's hall,	Springfield,	Additional egress; fire-stops.
G. A. R. memorial hall,	Springfield,	Ventilation; fire-stops.
German Turne hall,	West Springfield,	Fire-stops.
Ashley St. school,	Westfield,	Ventilation; fire-stops.
Worthington hotel,	Worthington,	Fire-stops.

Report of Inspector Cheney.

Sir: — There has been no unusual occurrence in my district during the past year. The usual additions, alterations and construction of new buildings have come, and the laws relating to the same have been carefully carried out in their construction. As the laws requiring fire-stops in buildings leave it entirely to the judgment of the inspector as to what they shall consist of and where they shall be located, I have from year to year required

Digitized by Google

more and more, until to-day I have the architects and owners so educated up to the necessity and importance of cutting off all channels and pockets where fire might spread through a building that there is but little trouble in getting specifications properly drawn to warrant me in putting in all the fire-stops needed. But they do not always tell the contractors how and where they shall be put, the specifications often saying that fire-stops shall be put in to the satisfaction of the State inspector, and leaving it entirely for me to determine how it shall be done and where they shall be located. In such cases I have made it a point to have the building thoroughly fire-stopped, cutting off all channels and spaces at every possible point, and making the buildings in case of fire as slow burning as it is possible to make buildings of their kind. I have so impressed owners, architects and contractors with the importance and advantage of this method of construction that there is not the trouble now that there has been in years past in getting fire-stops properly put in. Nevertheless, I am constantly on the watch, and visit the buildings as often during their construction as I can find time to do so. I have also instructed the contractors not to cover up any of the fire-stops until I have been notified and have inspected the work. In this way I am able to give the occupants of these buildings in the future much better protection against fire than could be given in years past.

There has been erected in my district during the past year 19 tenement-houses, containing in all more than 800 rooms. The most of these are located in the city of Lawrence, and are what are classed cheap tenement-houses. They are let principally to foreigners, who crowd them with human beings to their fullest capacity. In some places it is not an unusual thing to find five or six sleeping in one room. The necessity of giving this class of buildings careful attention during their construction is of vastly more importance than in the construction of factories. In a factory, should a fire occur while the employees are there, none would be asleep; but, on the other hand, should a fire occur in one of these tenement-houses during the night, all are supposed to be sleeping, and many of the tenement-houses are more densely populated by night than the factories are by day. The large number of children in these houses makes the danger all the greater in case of fire. There being no ordinance in some of these large manufacturing cities regulating the construction of buildings, the people are allowed to build buildings as high as they please, of such material as they wish and as broad as space will allow. It is not an unusual thing in my district to have buildings erected containing sixteen, twenty and twenty-four tenements, and four stories high; and, when occupied, each family will consist of from

Digitized by Google

five to fifteen persons, making no doubt as high as two hundred people in some of these houses at night. On some of the streets the houses are so near together that there is scarcely space enough to walk between them, — all wooden buildings, making practically one large building, covering acres of ground filled with human beings. The most an inspector can do under the present laws is to provide proper ways of egress and thoroughly fire-stop the building. We cannot build outside walls of brick, or refuse to approve plans that contain proper ways of egress, though they may be located among such surroundings as to make a building of this kind very dangerous in case of fire among them. I fear the time will come when there will be a conflagration in some of these cities, attended with loss of life; but hope, when that time comes, if it ever does, the State inspector will not be criticised for not having done his duty.

There has been erected in my district this year a number of lofty buildings, one being nine stories high, and built of wood. I have no control over such buildings, although I have been appealed to several times, the form accompanying the plans certifying that less than ten people were to be employed therein above the second story. These buildings are usually erected in connection with the leather business, and are used principally for drying purposes. The laws relating to ways of egress or means of escape from fire have been in force so long that most cases where fire-escapes are now ordered are where changes have been made in the occupancy of the building, or where additions to or alterations in it have been made so as to bring it under the law. I have had occasion to order but a few fire-escapes this year, and where I have it was made necessary in almost every case as above stated.

In conclusion, will say that I have found but little trouble in getting my orders and suggestions complied with, the owners of property realizing that in case of fire or accident they would have a poor defence in a civil suit, as well as being criminally liable, if they had failed to provide what the law requires in buildings.

Summary.

Number of buildings inspected,		270
Number of orders issued,		60
Number of plans received,		50
Tenement-houses,	19	
Hotels,	6	
Apartment houses,	10	
Fire station,	1	
Textile mills,	5	
Factories,	8	
Pavilion,	1	

Digitized by Google

Plans Received and Changes Recommended.

DISTRICT No. 8. ANSEL J. CHENEY, *Inspector.*

BUILDING.	Location.	Changes Recommended.
Allen's tenement house,	Lawrence,	None.
Sullivan's tenement house,	Lawrence,	Fire-stops.
Flemming tenement house,	Lawrence,	Additional fire-stops.
LaPlant's tenement house,	Lawrence,	Brick wall through the centre.
Ephriam Nolet's tenement house,	Lawrence,	Brick wall through the centre.
Downing's tenement house,	Lawrence,	None.
Hotel Thorwald,	Gloucester,	Fire-stops.
Guelmet's tenement block,	Lawrence,	None.
Tobin's tenement block,	Lawrence,	Fire-stops.
Fitzgerald's tenement block,	Lawrence,	Additional fire-stops.
Goldberg's tenement block,	Lawrence,	None.
Addition to Ocean Side hotel,	Gloucester,	Fire wall; rail on piazza roof.
Flume cottage,	Gloucester,	None.
Chase building,	Haverhill,	None.
Bonehur's tenement block,	Lawrence,	Fire stops.
McAvoy's block,	Lawrence,	Fire-stops.
Addition to City bank,	Gloucester,	None.
Fire station,	Salem,	None.
Butler's worsted mill,	Lawrence,	Additional egress.
Brogan's tenement block,	Lawrence,	Fire-stops.
Baker tenement block,	Lawrence,	Fire-stops.
Rhodes block,	Lynn,	Additional egress.
Baird's tenement block,	Lawrence,	Fire wall; stops.
Alterations, Music hall,	Lynn,	None.
Hajgar's tenement house,	Lawrence,	Fire-stops.
Chatswarth hall,	Lynn,	Fire-stops.
Addition to the Moorland hotel,	Gloucester,	Additional egress; fire-stops.
Barlow's block,	Lawrence,	Additional egress; fire-stops.
Vaughn Machine Co. factory,	Peabody,	None.
Cummings block,	Lawrence,	Additional fire-stops.
Winchester leather factory,	Peabody,	None.
Shaughnessy block,	Lawrence,	Fire-stops; additional egress.
Addition to Berry tavern,	Danvers,	None.
Lawrence's morocco factory,	Peabody,	None.
Addition to Kumhard mill,	Lawrence,	None.
Crosby block,	Beverly,	Additional egress; fire-stops.

Digitized by Google

Plans Received, etc. — Concluded.

Building.	Location.	Changes Recommended.
Tilton's tenement house,	Haverhill,	Fire-stops.
Kelley Bros. factory,	Haverhill,	None.
Kelley Bros. factory, No. 2,	Haverhill,	None.
Alteration, Littlefield & Plummer factory.	Lynn,	None.
Looney's factory,	Salem,	None.
Stevens' new mill,	Haverhill,	Additional egress.
Plum Island pavilion,	Newbury,	None.
Byfield woollen mill,	Newbury,	None.
Currier & Libby's tenement house,	Lawrence,	Additional egress; fire-stops.
Tilton's factory,	Haverhill,	Additional egress.
Aborn's hotel,	Gloucester,	Fire-stops.
Byfield woollen mill,	Newbury,	Additional egress.

Report of Buildings Inspected.

Class No. 1, District No. 8. ANSEL J. CHENEY, *Inspector*.

Name of Building.	Orders Given.	Compliances.
Amesbury.		
Amesbury opera house,	None,	-
Hamilton Woolen Mill Co., No. 7,	None,	-
American house,	Watchman; red lights; notices,	Complied.
Beverly.		
Foster & Young factory,	None,	-
J. A. Wallis factory,	None,	-
Marshall's hall,	None,	-
Second Baptist church,	None,	-
North Beverly Cong. church,	None,	-
North Beverly Cong. chapel,	None,	-
Bass River school,	Ventilate privies; furnish more cold air to furnaces.	Complied.
Gloucester.		
City hall,	None,	-
Collins school,	None,	-
Forbes school,	None,	-
Babson school,	Keep privies in a clean condition,	Complied.
Mt. Vernon school,	Protect woodwork around furnace pipe.	Complied.
Sawyer school,	None,	-
Stone Court school,	None,	-
Rogers school,	None,	-
Harvey school,	None,	-
Bradstreet school,	None,	-
Lane school,	None,	-
Bray school,	None,	-
Wonson school,	None,	-
The Thorwald hotel,	Red lights; notice; watchman; portable fire-escapes; means for extinguishing fire.	Complied.
The Grand View hotel,	None,	-
The Overlook hotel,	None,	-

Digitized by Google

Report of Buildings Inspected — Continued.

Name of Building.	Orders Given.	Compliances.
Gloucester — Con.		
The Moorland hotel,	Provide portable fire-escapes for new part; post notices.	Complied.
Harbor View house,	None,	-
Hawthorne Inn hotel,	None,	-
Hawthorne Inn Helps' cottage,	None,	-
Hawthorne Inn Manse cottage,	None,	-
Hawthorne Inn Province house,	None,	-
Hawthorne Inn Peabody hall,	None,	-
Hawthorne Inn Seven Gables,	None,	-
Hawthorne Inn Old Home,	None,	-
Hawthorne Inn Casino,	None,	-
The Beacherof hotel,	None,	-
Fair View hotel,	None,	-
Delphin hotel,	None,	-
Magnolia hotel,	None,	-
Hesperus house,	Portable fire-escapes in certain rooms.	Complied.
The Surfside hotel,	None,	-
Ocean house,	Portable fire-escapes,	Complied.
The Moorland hotel,	None,	-
Ocean Side hotel,	None,	-
Belmont house,	Portable fire-escapes in sleeping rooms.	Complied.
Webster block,	Fire-escape,	-
Tebbetts block,	None,	-
Essex.		
Essex town hall,	None,	-
Richardson hall,	None,	-
Danvers.		
C. C. Farwell factory,	None,	-
Universalist church,	None,	-
Catholic church,	None,	-
Baptist church,	None,	-
Baptist chapel,	None,	-
Centre Cong. church,	None,	-
Haverhill.		
Gale factory,	None,	-
Stevens mill,	None,	-
Stevens Little River mill,	None,	-
Green building,	Additional egress from third floor,	Complied.
Fox block,	None,	-
Academy of Music,	None,	-
Bishops block,	Remove obstruction to fire-escape window.	Complied.
Winter Street school,	Improve ventilation to water-closets; extend fire-escape to ground.	Complied.
High school,	None,	-
Whittier school,	None,	-
Currier school,	None,	-
Tilton school,	None,	-
Gilman building,	None,	-
Wingate school,	None,	-
Granite Front building,	Provide portable fire-escapes in certain rooms; keep rear entrance open.	Complied.
Building No. 20, Phœnix row,	Remove obstruction to fire-escape on the third floor.	Complied.
Bishops block, No. 2,	Remove obstruction to fire-escape,	Complied.
Thurston house,	Post fire-escape notices; watchman notice; fire-escapes in certain rooms.	Complied.
Boston hotel,	Portable fire-escapes in sleeping rooms.	Complied.
Thorndike hotel,	Portable fire-escapes; notices; means for extinguishing fire.	Complied.
Philadelphia hotel,	Portable fire-escapes,	Complied.
Elm house,	Portable fire-escapes in certain rooms.	Complied.
Taylor building,	None,	-

Digitized by Google

Report of Buildings Inspected — Continued.

Name of Building.	Orders Given.	Compliances.
Haverhill — Con.		
The Allen,	None,	-
Taylor block,	None,	-
Allen's block,	None,	-
Maynard's block,	None,	-
Ætna house,	None,	-
Eagle house,	Put fire-alarm gongs in working order; post notices.	Complied.
Cummings block,	None,	-
The Bartlett,	Portable fire-escapes in certain rooms; post notices.	Complied.
Provost's block,	None,	-
Hamilton.		
South school,	None,	-
Smith's block,	None,	-
Lynn.		
Malay Street church,	None,	-
Lynn theatre,	Put fire curtain in working order,	Complied.
Havelock house,	Portable fire-escapes in sleeping rooms.	Complied.
St. James house,	Portable fire-escapes in sleeping rooms.	Complied.
Moody's block,	Portable fire-escapes in sleeping rooms.	Complied.
The Algonquin house,	None,	-
The Richwood house,	Portable fire-escapes in all sleeping rooms.	Complied.
Newhall building,	Repair fire-escape ladder; provide means for extinguishing fire.	Complied.
Dearborn building,	None,	-
St. Joseph's church,	None,	-
St. Paul's M. E. church,	None,	-
Ingalls school,	None,	-
Coburn school,	None,	-
Lynn theatre,	None,	-
Ireson school,	None,	-
Corbet school,	None,	-
Corbet school annex,	None,	-
Buffum block,	Additional egress from top floor,	Complied.
School Street school,	None,	-
Red Rock school,	None,	-
Bothmore Street school,	None,	-
Washington Street school,	None,	-
The Nason,	Provide portable fire-escapes in certain rooms.	Complied.
Music hall,	Put fire curtain in working order,	Complied.
Cornish house,	Provide portable fire-escapes in rooms 17 and 18.	Complied.
Breed building,	None,	-
Newhall building,	Light stairways,	Complied.
Woodbury block,	None,	-
Merritt hat factory,	None,	-
Thomas block,	None,	-
Vincent's box shop,	None,	-
Stroutt building, No. 1,	Remove obstruction to fire-escape,	Complied.
Stroutt building, No. 2,	No order,	-
G. A. R. building,	Provide fire-wall around boiler,	Complied.
New Woodward,	Portable fire-escapes in sleeping rooms.	Complied.
Highland house,	Portable fire-escapes in sleeping rooms.	Complied.
Spinney & Caldwell factory,	None,	-
Elder block,	Light stairways,	Complied.
Valpey & Anthony building,	Do not obstruct the passage to fire-escape.	Complied.
Valpey & Anthony building No. 2,	Do not obstruct the passage to fire-escape.	Complied.
Littlefield & Plumm building No. 1,	None,	-
Littlefield & Plumm building No. 2,	None,	-
Littlefield & Plumm building No. 3,	None,	-
Littlefield & Plumm building No. 4,	None,	-

Digitized by Google

Report of Buildings Inspected — Continued.

Name of Building.	Orders Given.	Compliances.
Lynn — Con.		
Tapley building,	Remove obstruction to back stairs,	Complied.
The Prestall hotel,	None,	–
Bay View hotel,	Portable fire-escapes in certain rooms.	Complied.
Ashcroft building,	Repair stairs; provide suitable egress from fourth floor.	Complied.
Archer block,	None,	–
Putnam's block,	Fire-escape,	–
Buffum building,	Additional egress,	Complied.
Marblehead.		
Nanapashemet house,	None,	–
Merrimac.		
Judkins' carriage factory,	None,	–
Masonic hall,	None,	–
Monomac house,	Provide fire-escapes in certain rooms.	Complied.
Manchester.		
The Blynman hotel,	Repair outside fire-escape,	Complied.
Salem.		
Mechanics hall,	None,	–
Naumkeg building,	None,	–
Bowker block,	Provide water-closets,	Complied.
French convent,	None,	–
French Catholic church,	None,	–
French Catholic dormitory,	None,	–
City orphan asylum,	None,	–
North Unitarian church,	None,	–
North Unitarian chapel,	None,	–
Salem club,	None,	–
Upham school,	None,	–
Coggswell school,	None,	–
Dunlap school,	None,	–
Pickering school,	None,	–
Prescott school,	None,	–
Bertram school,	None,	–
Saltonstall school,	None,	–
Brown school,	None,	–
Endicott school,	None,	–
Low school,	None,	–
Lines school,	None,	–
Herbert Street school,	None,	–
Salem market house,	Remove obstruction to eastern entrance.	Complied.
Naumkeg Mill No. 1,	None,	–
Naumkeg Mill No. 2,	None,	–
Naumkeg Mill No. 3,	None,	–
Naumkeg Mill No. 5,	None,	–
The Wentworth,	None,	–
Almshouse,	None,	–
Insane asylum,	None,	–
Plummer farm school,	None,	–
First church,	None,	–
Central house,	None,	–
Atlantic house,	None,	–
Ocean View house,	None,	–
Oliver block,	Portable fire-escapes in certain rooms,	Complied.
Geo. E Putnam factory,	None,	–
Curmeys factory,	None,	–
Looneys factory,	None,	–
M. Looneys factory,	None,	–
Grace church,	None,	–
Grace church chapel,	None,	–
Swampscott.		
Pine Street school,	None,	–
Reddington school,	Remove combustible material in cellar.	Complied.
Town hall,	None,	–
The Belleveau hotel,	None,	–

Digitized by Google

Report of Buildings Inspected — Continued.

Name of Building.	Orders Given.	Compliances.
Swampscott — Con.		
The Elms hotel,	None,	-
Hotel Preston,	None,	-
Big Annewan hotel,	None,	-
Little Annewan hotel,	None,	-
Ocean house,	None,	-
Lincoln house,	None,	-
Salisbury.		
Hotel Cushing,	None,	-
Seaside house,	Fire-alarm gongs,	Complied.
Atlantic house,	None,	-
Topsfield.		
Town hall,	Keep privies in a clean condition and free from effluvia.	Complied.
John Bailey factory,	None,	-
Georgetown.		
Pentucket house,	None,	-
Wenham.		
Congregational church,	None,	-
Congregational church, chapel,	None,	-
Centre primary school,	None,	-
Town hall,	None,	-
Groveland.		
Groveland mills, No. 1,	Extend fire-escape; rail stairs,	Complied.
Groveland mills, No. 2,	No order,	-
Groveland mills, No. 3,	Rail stairs,	Complied
Newburyport.		
City hall,	None,	-
Kelley school,	None,	-
L. A. Pope church,	None,	-
Y. M. C A. building,	None,	-
Joy building,	Protect floor timbers over boiler,	-
C. E. Plummer factory,	None,	-
Whitefield mill,	None,	-
Newbury.		
Plum Island hotel,	None,	-
Plum Island pavilion,	None,	-
Byfield Woolen Co. mill,	None,	-
Byfield Woolen Co. storehouse,	None,	-
Nahant.		
Nahant hotel,	None,	-
Bass Point house,	None,	-
Hotel Tudor,	None,	-
Fair View house,	None,	-
Middleton.		
Middleton Paper Co. factory,	None,	-
North Andover.		
The Brightwool mill,	None,	-
North Andover mill,	None,	-
Merrimac school,	None,	-
Bradstreet school,	None,	-
Peabody.		
Vaughn Machine Co.,	None,	-
South Congregational church,	None,	-
First Unitarian church,	None,	-
Washington St. Methodist church,	Additional egress,	-
Lynnfield.		
Pavilion,	None,	-

Digitized by Google

Report of Buildings Inspected — Concluded.

Name of Building.	Orders Given.	Compliances.
Lawrence.		
Lawrence opera house,	Remove combustible material from cellar.	Complied.
Lawrence new theatre,	None,	-
Arlington top mill,	None,	-
Oswald block,	Provide portable fire-escapes in sleeping rooms.	Complied.
Garry tenement house,	None,	-
Garry tenement house, No. 2,	None,	-
Casino,	None,	-
Smith block,	None,	-
Smith block, No. 2,	None,	-
Smith block, No. 3,	Fire-escape,	Complied.
Pemberton River mill,	None,	-
Chapman block,	Provide portable fire-escapes in sleeping rooms.	-
Appleton block,	Provide portable fire-escapes in sleeping rooms.	Complied.
Appleton block, No. 2,	Provide portable fire-escapes in sleeping rooms.	Complied.
Park hotel,	Red lights; watchman; notices; gongs; portable fire-escapes.	Complied.
Hart's block,	None,	-
Shaughnessy block,	Portable fire-escapes,	Complied.
Carruthers block,	Fire-escape,	Complied.
Smith's block,	Fire-escape,	Complied.
Ipswich.		
Agawam house,	None,	-
House of Correction,	None,	-
Rockport.		
Granite Co tenement house,	None,	-
Ocean View house,	None,	-
Pigeon Cove house,	None,	-
Ocean View annex,	None,	-
Granite Shore hotel,	None,	-
Pigeon Hill school,	None,	-
Pigeon Cove grammar school,	None,	-

Report of Inspector Splaine.

Sir: — I respectfully submit herewith a tabulated report of inspections made by me in District No. 9 during the past year, and of supervisory work on plans of certain buildings performed during the same time and in the same district.

The duty of inspecting buildings already occupied, and of examining plans of certain buildings to be erected or in course of erection, has been performed under authority of certain sections of chapter 481 of the Acts of 1894. I have made regular inspections of many factories, hotels, boarding-houses, lodging-houses and apartment houses, and have found it necessary in some instances to order additional means of egress; in some others the reopening of former means of egress, lately neglected or closed up; while in others I have ordered means or additional means of extinguishing fire, and also the placing of ropes or other better means of escape in case of fire in some of the rooms.

Digitized by Google

I have worked diligently on plans of certain buildings in my district, submitted for the action of this department, and have succeeded in securing good results. In some instances I have secured additional or better means of egress, while in others I have secured better or additional fire and smoke stops. A vast amount of work is necessarily expended on the examination of plans, and in bringing about, through conferences with architects and owners, the changes needed to secure to the future occupants of these buildings proper opportunities to escape in case of fire; and, even after these results have been secured by necessary changes in the plans, I have found it of importance to visit the buildings during process of erection, in order to know beyond all question that the changes suggested have been made and that smoke and fire stopping has not been forgotten. Many visits are required and much labor performed in discharging these last and very important duties, — labor which cannot be tabulated to the credit of the inspector.

A large number of certificates showing the means of egress from each floor of such buildings as I have described have been issued to the owners during the present year. These certificates are important, as showing to the occupants or operatives that there are ample means of escape in case of fire; and they also show that the Commonwealth of Massachusetts has not forgotten to provide by law for the safety of this portion of her population.

Report of Buildings Inspected.

CLASS NO. 1, DISTRICT NO. 9. HENRY SPLAINE, *Inspector.*

NAME OF BUILDING.	Orders Given.	Compliances.
Brookline.		
Hotel Wallaton apartment building,	None,	-
O'Brien's apartment building,	None,	-
Howe apartment building,	None,	-
Howe apartment building, 2d,	None,	-
Williard apartment building,	None,	-
Graffam apartment building,	None,	-
Graffam apartment building, No. 2,	None,	-
Littlefield apartment building,	None,	-
The Gables apartment building,	None,	-
The Larchmont apartment building,	None,	-
The Kenilworth apartment building.	None,	-
The Marion apartment building,	None,	-
The Colchester apartment building,	Means to extinguish fire,	Complied.
The Kenmoir apartment building,	Means to extinguish fire,	Complied.
The Bonair apartment building,	Means to extinguish fire,	Complied.
The Majestic apartment building,	Means to extinguish fire,	Complied.
The Verona apartment building,	None,	-
The Wickfield apartment building,	None,	-
The Miles apartment building,	None,	-
The Driscoll apartment building,	Means to extinguish fire,	Complied.
The Aspinwall apartment building,	Additional means of egress,	*-
Hotel Devonshire apartment building.	Means to extinguish fire,	Complied.

* Awaiting changes.

Digitized by Google

Report of Buildings Inspected — Continued.

Name of Building.	Orders Given.	Compliances.
Brookline — Con.		
Clement apartment building,	None,	-
Davis Mansion apartment building,	None,	-
McLeod Mansion apartment building.	None,	-
Saint Andrews apartment building,	None,	-
Seamans' block apartment building,	None,	-
Lynch's block apartment building,	None,	-
Gilfoyle's apartment building,	None,	-
Sullivan's apartment block,	None,	-
Keening's apartment building,	None,	-
The Annamac apartment building,	None,	-
The Windivoe apartment building,	None,	-
Boynton apartment building,	None,	-
Littlefield apartment building, 20 Winchester street.	Means to extinguish fire,	Complied.
Littlefield apartment building, 15 Centre street.	None,	-
Am. Screen Co.'s factory,	None,	-
Cook apartment building, 97 and 99 Brooke street.	None,	-
Cook apartment building, 101 and 103 Brooke street.	None,	-
Cook apartment building, 105 and 107 Brooke street.	None,	-
Cook apartment building, 109 and 111 Brooke street.	None,	-
Tower apartment building, 2 Homer street.	None,	-
Tower apartment building, 4 Homer street.	None,	-
Tower apartment building, 6 Homer street.	None,	-
Tower apartment building, 8 Homer street.	None,	-
Tower apartment building, 1 Aspinwall avenue.	None,	-
Tower apartment building, 3 Aspinwall avenue.	None,	-
Tower apartment building, 5 Aspinwall avenue.	None,	-
Tower apartment building, 7 Aspinwall avenue.	None,	-
Harvey boarding house,	None,	-
Pineo apartment building,	None,	-
Kiley apartment building,	None,	-
Griggs apartment building, 15 Linden street.	Means to extinguish fire,	Complied.
Griggs apartment building, rear of 15 Linden street.	Means to extinguish fire,	Complied.
The Linden apartment building,	None,	-
The Elizabeth apartment building,	None,	-
The Monteith apartment building,	None,	-
Colonade Block apartment building,	None,	-
The Algonquin apartment building,	Means to extinguish fire,	Complied.
National Bank building apartments,	None,	-
Somerset House hotel,	None,	-
Mrs Fenn's boarding house,	None,	-
Bailey's mill,	None,	-
Stearn's apartment building,	Put on fire-escape,	Complied.
The Whyte apartment building,	None,	-
The Grafton apartment building,	None,	-
The Kempsford apartment building,	None,	-
John Shield's workshop,	None,	-
E. C. Ritchie & Son's factory,	None,	-
O'Hearn apartment building,	None,	-
The Elsa apartment building,	None,	-
The Lester apartment building,	None,	-
The Harmon apartment building,	Means to extinguish fire,	Complied.
The Reid apartment building,	Means to extinguish fire,	Complied.
Moore apartment building,	Additional egress; means to extinguish fire.	Complied in part.
The Abbotsford apartment building,	Means to extinguish fire,	Complied.

Digitized by Google

Report of Buildings Inspected — Continued.

Name of Building.	Orders Given.	Compliances.
Brookline — Con.		
The Groton apartment building,	None,	-
The Kansas apartment building,	None,	-
Morloch's hotel,	None,	-
Mrs. Smith's boarding house,	None,	-
Brookline almshouse,	None,	-
The Belknap apartment building,	None,	-
The Fosdick apartment building,	None,	-
The Isbrook apartment building,	None,	-
The Verick apartment building,	None,	-
Holtzer-Cabot Electric Co.'s factory,	None,	-
Bridgman hotel,	Means to extinguish fire,	Complied.
Framingham.		
The Smalley straw factory,	None,	-
The Barber straw factory,	None,	-
Old Colony house,	Keep fire-pails filled,	Shut down.
Gregory, Shaw & Co.'s shoe factory,	None,	-
A. M. Eames' wheel factory,	None,	-
Sleeper's lodging house,	None,	-
Hotel Winthrop,	None,	-
French Bros.' apartment house,	None,	-
The Proctor boarding house,	None,	-
Ordway's chair factory,	None,	-
Framingham Box Co.,	None,	-
Dennison Mfg. Co., mill No. 2,	None,	-
Dennison Mfg Co., mill No. 4,	None,	-
Dennison Mfg. Co., mill No. 5,	None,	-
Everett House hotel,	Ropes in certain sleeping rooms,	Complied.
Coston's apartment block,	Fire-escape; means to extinguish fire.	Under consideration.
Sanitarium apartment building,	Means to extinguish fire; re-open back stairs.	Complied.
Blade's apartment building,	None,	-
Delaney apartment building,	None,	-
Framingham almshouse,	None,	-
Home for the Aged,	None,	-
Moulton's apartment building,	None,	-
Central House hotel,	None,	-
Holliston.		
Driscoll's shoe factory,	Put on fire-escape,	In abeyance.
Clancey's shoe factory,	None,	-
The Mowrey Straw Works,	None,	-
Holliston Harness Co's. factory,	None,	-
Bullard House hotel,	None,	-
Talbot's nail factory,	None,	-
The Holliston home,	None,	-
Holliston Yarn Co.,	None,	-
Hopkinton.		
Cook, Root & Co's. shoe factory,	None,	-
Hopkinton House hotel,	None,	-
Gerry's boarding house,	None,	-
Central House hotel,	None,	-
Park House hotel,	None,	-
Reservoir House hotel,	None,	-
Hopkinton almshouse,	Open second stairs from attic and place fire-pails.	Complied.
Milford.		
Milford Shoe Co., No. 1,	None,	-
Milford Shoe Co., No. 2,	None,	-
Milford Shoe Co., No. 3,	None,	-
Eastman's box factory,	None,	-
Green Brother's heel factory,	None,	-
Clap, Huckins & Temple's shoe factory.	None,	-
Mann & Co's. factory,	None,	-
Claflin apartment house, 74 Central street.	None,	-
Claflin apartment house, 88 Central street.	None,	-
Claflin apartment house, 99 Central street.	None,	-

Digitized by Google

Report of Buildings Inspected — Concluded.

Name of Building.	Orders Given.	Compliances.
Milford — Con.		
Claflin apartment house, 39 West street.	None,	-
Milford almshouse,	None,	-
The Spalding straw factory,	None,	-
Milford House hotel,	None,	-
Ambrosilia apartment house,	Repair fire-escape; means to extinguish fire.	Complied.
Lincoln House hotel,	None,	-
Hotel Willian,	None,	-
Mansion House hotel,	None,	-
Hotel Manion,	Ropes and fire-pails,	Complied.
Gillon's hotel,	None,	-
Mechanics Block apartments,	None,	-
Goucher's hotel,	None,	-
Gillon Hotel boarding house,	None,	-
Union House hotel,	None,	-
Quincy.		
Hobart & Holmes wrapper factory,	Additional stairs and fire-pails,	Building vacated.
Sherborn.		
Sherborn almshouse,	None,	-
Southborough.		
Brigham's factory,	None,	-
Cordaville Woollen Co., Mill No. 1,	None,	-
Cordaville Woollen Co., Mill No. 2,	None,	-
Weymouth.		
Cate's wrapper factory,	Put on fire-escape,	Complied.

Plans Received and Changes Recommended.

District No. 9. HENRY SPLAINE, *Inspector.*

Building.	Location.	Changes Recommended.
Morse apartment building,	Brookline,	None.
Hotel Loraine apartment building,	Brookline,	None.
Hotel Trianon apartment building,	Brookline,	None.
The Kent apartment building,	Brookline,	None.
The Ambleside apartment building,	Brookline,	Additional fire-stops.
Saraco apartment building,	Brookline,	None.
Blackwell apartment building,	Brookline,	None.
Hodge apartment building,	Brookline,	Additional fire-stops.
Sundell apartment building,	Brookline,	None.
Griggs apartment building, 2d,	Brookline,	None.
Shapleigh apartment building,	Brookline,	Additional egress.
Brewer apartment building, 2d,	Brookline,	None.
Driscoll apartment building,	Brookline,	Additional plans.
Hotel for Kendall Co.,	Framingham,	Additional plans.

Digitized by Google

Plans Received, etc.—Concluded.

Building.	Location.	Changes Recommended.
The Hollis apartment building, .	Framingham, .	None.
Dennison M'f'g Co., mill No. 9, .	Framingham, .	Under consideration.
Tileston shoe factory, ...	Randolph, . .	Additional egress.
Cate's wrapper factory, ...	Weymouth, . .	Additional egress.

Report of Inspector Merriam.

Sir:—I have the honor to submit the following report of work performed by me during the past year, tabulated in part in usual form.

Of the buildings inspected requiring changes, my recommendations have been promptly carried out, except in two or three cases of school buildings where committees failed to get the required appropriations. The number of plans submitted for new buildings is somewhat larger and of a different class than in previous years. Among them are several good-sized hotels, most of which are of a high class of construction. The number of school buildings is very small. In general, there is a noticeable improvement in the matter of safety from fires.

The usual amount of time has been given to the testing of heating and ventilating systems, consultations with committees and others, and in visiting buildings during erection, and changes whenever circumstances required or opportunity afforded.

Report of Buildings Inspected.

Class No. 1, District No. 10. FREDERICK W. MERRIAM, *Inspector*.

Name of Building.	Orders Given.	Compliances.
Clarksburg.		
Houghton Street school, ...	Better ventilation, ...	-
Briggsville school, ...	Better ventilation, ...	-
Conway.		
Conway Shoe Co.'s mill, ...	Remove rubbish from stairs, . .	Complied.
Colrain.		
Willis Place mill, ...	To examine changes, ...	-
Charlemont.		
Hotel Charlemont, ...	Protect steam pipes, ...	Complied.
Dalton.		
Craneville school, ...	Change dampers, ...	Complied.
High school.	To examine changes, ...	-

Digitized by Google

Report of Buildings Inspected — Concluded.

Name of Building.	Orders Given.	Compliances.
Deerfield.		
Bloody Brook house,	Protect steam pipes,	Complied.
Greenfield.		
Opera house,	Change in stairs,	Complied.
Episcopal church,	Better ventilation,	-
Gt. Barrington.		
Robbins block,	Better egress,	Complied.
Holyoke.		
So. Chestnut Street school,	Special report,	-
City Farm building,	Special report,	-
Lee.		
High school,	Change in sanitary pipes,	Complied.
Lenox.		
Curtis hotel,	Red lights at stairs,	Complied.
Leverett.		
Town hall,	Swing doors out,	Complied.
Montague.		
Amidon hall,	Fire escape,	Complied.
New Marlborough.		
Town hall,	Swing doors out,	Complied.
Congregational church,	Swing doors out,	Complied.
Catholic church,	Swing doors out,	Complied.
Northfield.		
Town hall,	Swing doors out; connect furnace with outside.	Complied.
North Adams.		
Walden school,	Change ducts,	Complied.
Houghton library,	Change flues,	Complied.
Jewish synagogue,	To examine changes,	-
Willson hall,	Repair fire curtain,	Complied.
Northampton.		
High school,	Special report,	-
Orange.		
Myrtle Street school,	Better ventilation,	-
Pittsfield.		
Hurlbut Stationery Co.'s mill,	Extend fire-escape,	Complied.
Pontoosuc Woolen Co.'s mill,	Fire-escape,	Complied.
Hull & Morton block,	Special report,	-
Burbank block,	To examine changes,	-
Central block,	To examine changes,	-
Shelburne.		
Memorial hall,	Dampers in ducts,	Complied.
Shutesbury.		
Baptist church,	Swing doors out,	Complied.
Williamstown.		
High school,	Protect steam pipes; change ducts,	Complied.
West Springfield.		
Mittineague school,	Special report,	-
Ware.		
West Street school,	Special report,	-

Digitized by Google

Plans Received and Changes Recommended.

DISTRICT NO. 10. FREDERICK W. MERRIAM, *Inspector.*

BUILDING.	Location.	Changes Recommended.	
Notre Dame school,	Adams,	-	-
Town hall and library,	Cheshire,	-	-
Berkshire inn, addition,	Great Barrington,	-	-
Mt. Hermon chapel,	Gill,	-	-
Mt. Hermon dormitory,	Gill,	-	-
Opera house, changes,	Greenfield,	-	-
New school,	Greenfield,	Ventilation.	
First M. E. church,	Lee,	Metal ducts.	
Boardman hotel,	Lee,	Better egress.	
Curtis hotel, addition,	Lenox,	Better egress.	
St. John's church,	Montague,	-	-
Dickinson library,	Northfield,	-	-
Barbers mill,	North Adams,	Better egress.	
Rich's block, No. 1,	North Adams,	Fire-stops.	
Rich's block, No. 2,	North Adams,	Fire-stops.	
Boland hotel,	North Adams,	Better egress.	
Rich & Robinson's block,	North Adams,	Fire-stops.	
Hotel Wendell,	Pittsfield,	-	-
American House, addition,	Pittsfield,	-	-
Burbank building,	Pittsfield,	Better egress.	
Murphy block,	Pittsfield,	-	-
Public library,	Shelburne,	-	-

Certificates Issued.

PUBLIC BUILDINGS, FACTORIES, WORKSHOPS AND TENEMENT-HOUSES.	Story.	Location.	Date of Certificate.	INSPECTOR.
			1898.	
Nonantum building,	2	Newton,	Mar. 10,	J. A. Moore.
Nonantum building,	3	Newton,	10,	J. A. Moore.
Quincy Music Hall building,	*	Quincy,	Apr. 28,	J. A. Moore.
Quincy Music Hall building,	†	Quincy,	28,	J. A. Moore.
L. J. French block,	3	Hyde Park,	May 5,	J. A. Moore.
Hudson Savings Bank building,	3	Hudson,	17,	J. A. Moore.
Majestic hotel,	1	Brookline,	27,	Henry Splaine.
Majestic hotel,	2	Brookline,	27,	Henry Splaine.
Majestic hotel,	3	Brookline,	27,	Henry Splaine.

* Auditorium. † Gallery.

Digitized by Google

Certificates Issued — Continued.

Public Buildings, Factories, Workshops and Tenement-houses.	Story.	Location.	Date of Certificate.	Inspector.
			1898.	
Majestic hotel,	4	Brookline,	May 27,	Henry Splaine.
Majestic hotel,	5	Brookline,	27,	Henry Splaine.
Majestic hotel,	6	Brookline,	27,	Henry Splaine.
Masonic hall,	-	Hopkinton,	Aug. 20,	J. A. Moore.
The Kent,	1	Brookline,	Sept. 22,	Henry Splaine.
The Kent,	2	Brookline,	22,	Henry Splaine.
The Kent,	3	Brookline,	22,	Henry Splaine.
The Kent,	4	Brookline,	22,	Henry Splaine.
Brewer apartment house,	1	Brookline,	Oct. 6,	Henry Splaine.
Brewer apartment house,	2	Brookline,	6,	Henry Splaine.
Brewer apartment house,	3	Brookline,	6,	Henry Splaine.
Brewer apartment house,	4	Brookline,	6,	Henry Splaine.
Brewer 8-apartment house,	1	Brookline,	6,	Henry Splaine.
Brewer 8-apartment house,	2	Brookline,	6,	Henry Splaine.
Brewer 8-apartment house,	3	Brookline,	6,	Henry Splaine.
Brewer 8-apartment house,	4	Brookline,	6,	Henry Splaine.
Grigg's apartment house,	1	Brookline,	6,	Henry Splaine.
Grigg's apartment house,	2	Brookline,	6,	Henry Splaine.
Grigg's apartment house,	3	Brookline,	6,	Henry Splaine.
Grigg's apartment house,	4	Brookline,	6,	Henry Splaine.
Grigg's apartment house, No. 2,	1	Brookline,	6,	Henry Splaine.
Grigg's apartment house, No. 2,	2	Brookline,	6,	Henry Splaine.
Grigg's apartment house, No. 2,	3	Brookline,	6,	Henry Splaine.
Grigg's apartment house, No. 2,	4	Brookline,	6,	Henry Splaine.
Klous' apartment house,	1	Brookline,	6,	Henry Splaine.
Klous' apartment house,	2	Brookline,	6,	Henry Splaine.
Klous' apartment house,	3	Brookline,	6,	Henry Splaine.
Klous' apartment house,	4	Brookline,	6,	Henry Splaine.
Larchmont apartment house,	1	Brookline,	6,	Henry Splaine.
Larchmont apartment house,	2	Brookline,	6,	Henry Splaine.
Larchmont apartment house,	3	Brookline,	6,	Henry Splaine.
Littlefield apartment house,	1	Brookline,	6,	Henry Splaine.
Littlefield apartment house,	2	Brookline,	6,	Henry Splaine.
Littlefield apartment house,	3	Brookline,	6,	Henry Splaine.
Littlefield apartment house,	4	Brookline,	6,	Henry Splaine.
O'Hearn apartment house,	1	Brookline,	6,	Henry Splaine.

Digitized by Google

Certificates Issued — Continued.

Public Buildings, Factories, Workshops and Tenement-houses.	Story.	Location.	Date of Certificate.	Inspector.
			1898.	
O'Hearn apartment house, . .	2	Brookline, .	Oct. 6,	Henry Splaine.
O'Hearn apartment house, . .	3	Brookline, ..	6,	Henry Splaine.
O'Hearn apartment house, . .	4	Brookline, .	6,	Henry Splaine.
Richmond Court apartment house, .	1	Brookline, .	6,	Henry Splaine.
Richmond Court apartment house, .	2	Brookline, .	6,	Henry Splaine.
Richmond Court apartment house, .	3	Brookline, .	6,	Henry Splaine.
Richmond Court apartment house, .	4	Brookline, .	6,	Henry Splaine.
Abbotsford apartment house, . .	1	Brookline, .	7,	Henry Splaine.
Abbotsford apartment house, . .	2	Brookline, .	7,	Henry Splaine.
Abbotsford apartment house, . .	3	Brookline, .	7,	Henry Splaine.
Abbotsford apartment house, . .	4	Brookline, .	7,	Henry Splaine.
Bridgman hotel, ...	1	Brookline, .	7,	Henry Splaine.
Bridgman hotel, ...	2	Brookline, .	7,	Henry Splaine.
Bridgman hotel, ...	3	Brookline, .	7,	Henry Splaine.
Bridgman hotel, ...	4	Brookline, .	7,	Henry Splaine.
Hodge apartment house, . . .	1	Brookline, .	7,	Henry Splaine.
Hodge apartment house, . . .	2	Brookline, .	7,	Henry Splaine.
Hodge apartment house, . . .	3	Brookline, .	7,	Henry Splaine.
Hodge apartment house, . . .	4	Brookline, .	7,	Henry Splaine.
Hotel Devonshire, ...	1	Brookline, .	7,	Henry Splaine.
Hotel Devonshire, ...	2	Brookline, .	7,	Henry Splaine.
Hotel Devonshire, ...	3	Brookline, .	7,	Henry Splaine.
Hotel Devonshire, ...	4	Brookline, .	7,	Henry Splaine.
The Colchester, ...	1	Brookline, .	7,	Henry Splaine.
The Colchester, ...	2	Brookline, .	7,	Henry Splaine.
The Colchester, ...	3	Brookline, .	7,	Henry Splaine.
The Colchester, ...	4	Brookline, .	7,	Henry Splaine.
The Colchester, ...	5	Brookline, .	7,	Henry Splaine.
The Colchester, ...	6	Brookline, .	7,	Henry Splaine.
The Proctor house, ...	1	Brookline, .	7,	Henry Splaine.
The Proctor house, ...	2	Brookline, .	7,	Henry Splaine.
The Proctor house, ...	3	Brookline, .	7,	Henry Splaine.
The Stearns apartment house, . .	1	Brookline, .	7,	Henry Splaine.
The Stearns apartment house, . .	2	Brookline, .	7,	Henry Splaine.
The Stearns apartment house, . .	3	Brookline, .	7,	Henry Splaine.
The Stearns apartment house, . .	4	Brookline, .	7,	Henry Splaine.

Digitized by Google

Certificates Issued — Concluded.

Public Buildings, Factories, Workshops and Tenement-houses.	Story.	Location.	Date of Certificate.	Inspector.
			1898.	
Tileston wooden factory, . . .	1	Randolph, .	Oct. 7,	Henry Splaine.
Tileston wooden factory, . . .	2	Randolph, .	7,	Henry Splaine.
Tileston wooden factory, . . .	3	Randolph, .	7,	Henry Splaine.
Tileston wooden factory, . . .	4	Randolph, .	7,	Henry Splaine.
Hotel Wallaton, ...	1	Brookline, .	8,	Henry Splaine.
Hotel Wallaton, ...	2	Brookline, .	8,	Henry Splaine.
Hotel Wallaton, ...	3	Brookline, .	8,	Henry Splaine.
Hotel Wallaton, ...	4	Brookline, .	8,	Henry Splaine.
Hotel Wallaton, ...	5	Brookline, .	8,	Henry Splaine.
Hotel Wallaton, ...	6	Brookline, .	8,	Henry Splaine.
Kenilworth apartment house, . .	1	Brookline, .	8,	Henry Splaine.
Kenilworth apartment house, . .	2	Brookline, .	8,	Henry Splaine.
Kenilworth apartment house, . .	3	Brookline, .	8,	Henry Splaine.
Kenilworth apartment house, . .	4	Brookline, .	8,	Henry Splaine.
Bonair apartment house, . . .	1	Brookline, .	19,	Henry Splaine.
Bonair apartment house, . . .	2	Brookline, .	19,	Henry Splaine.
Bonair apartment house, . . .	3	Brookline, .	19,	Henry Splaine.
Bonair apartment house, . . .	4	Brookline, .	19,	Henry Splaine.
Bonair apartment house, . . .	5	Brookline, .	19,	Henry Splaine.
Bonair apartment house, . . .	6	Brookline, .	19,	Henry Splaine.
Kenmoir apartment house, . .	1	Brookline, .	19,	Henry Splaine.
Kenmoir apartment house, . .	2	Brookline, .	19,	Henry Splaine.
Kenmoir apartment house, . .	3	Brookline, .	19,	Henry Splaine.
Kenmoir apartment house, . .	4	Brookline, .	19,	Henry Splaine.
Kenmoir apartment house, . .	5	Brookline, .	19,	Henry Splaine.
Kenmoir apartment house, . .	6	Brookline, .	19,	Henry Splaine.
Winship & Bolts knitting mill, .	1	Wakefield, .	25,	H. J. Bardwell.
Winship & Bolts knitting mill, .	2	Wakefield, .	25,	H. J. Bardwell.
Winship & Bolts knitting mill, .	3	Wakefield, .	25,	H. J. Bardwell.
Merriams piano-stool factory, . .	1	South Acton,	25,	H. J. Bardwell.
Merriams piano-stool factory, . .	2	South Acton,	25,	H. J. Bardwell.
Merriams piano-stool factory, . .	3	South Acton,	25,	H. J. Bardwell.
Beggs & Cobb's currying shop, .	1	Winchester, .	25,	H. J. Bardwell.
Beggs & Cobb's currying shop, .	2	Winchester, .	25,	H. J. Bardwell.
Beggs & Cobb's currying shop, .	3	Winchester, .	25,	H. J. Bardwell.
Beggs & Cobb's currying shop, .	4	Winchester, .	25,	H. J. Bardwell.
Beggs & Cobb's currying shop, .	5	Winchester, .	25,	H. J. Bardwell.

Digitized by Google

Reports by Districts of Factories, Workshops and Mercantile Establishments Inspected and Orders Issued.

Report of Inspector Burfitt.

Sir: — I respectfully submit my annual report of inspections in District No. 1 during the year just closed.

I find there has been an increase in the number of employees over last year, as to the adults and minors over fourteen years old, and a decrease in the number under fourteen, showing that business is some better than last year.

The new law passed last winter by the Legislature, to take effect the first of September, 1898, forbidding minors under fourteen years of age to be employed in any factory, workshop or mercantile establishment, and also requiring two lists to be made of all minors over fourteen and under sixteen, one list to be posted near the entrance of the factory and the other kept on file in the office, will be a great help to the inspectors, in my opinion, as they can compare results.

I have found much the same duties to perform as last year, in regard to the guarding of machinery and posting time tables. The reason of this is because of changes being made in machinery, causing shafting to be moved and partitions and walls also.

There has been no attempt to disregard the labor law, to my knowledge, although it conflicts somewhat with laundries, as the hours worked by them are hard to divide, while the factories generally have regular hours every day of the week.

The school certificate law is very generally complied with. I have found very few minors under sixteen who did not have their certificates on file.

Summary.

Number of inspections made,	594
Number of orders issued,	468
Number of males under fourteen years,	3
Number of females under fourteen years,	1
Number of males between fourteen and sixteen,	335
Number of females between fourteen and sixteen,	196
Number of males employed,	25,808
Number of females employed,	11,951
Total number employed,	37,759
Number of elevators inspected,	346

Digitized by Google

CITIES AND TOWNS.	Inspections.	Males.	Females.	Under 14.		Between 14 and 16.	
				Males.	Females.	Males.	Females.
Acton,	8	87	43	-	-	2	-
Ashby,	2	2	-	-	-	-	-
Arlington,	6	81	-	-	-	-	-
Ayer,	12	155	25	-	-	7	1
Concord,	3	103	69	-	-	-	-
Cambridge,	179	8,614	3,117	-	-	70	69
Everett,	22	661	99	3	-	8	4
Bedford,	1	75	-	-	-	-	-
Burlington,	1	12	11	-	-	-	-
Groton,	5	76	21	-	-	1	-
Hudson,	17	1,009	489	-	-	12	10
Lexington,	2	11	26	-	-	-	-
Littleton,	3	47	24	-	-	1	-
Malden,	52	1,775	1,220	-	1	29	3
Medford,	24	459	71	-	-	20	1
Melrose,	17	799	690	-	-	13	-
Maynard,	2	702	368	-	-	22	19
Reading,	17	237	169	-	-	-	-
Pepperell,	6	762	162	-	-	20	19
Shirley,	4	277	213	-	-	12	3
Sudbury,	1	13	-	-	-	-	-
Stoneham,	27	831	379	-	-	9	-
Stow,	1	54	23	-	-	4	1
Somerville,	55	2,520	449	-	-	32	4
Townsend,	4	85	7	-	-	2	-
Wakefield,	20	1,013	354	-	-	8	8
Waltham,	30	2,410	3,194	-	-	48	39
Wayland,	8	389	69	-	-	7	-
Woburn,	49	1,313	402	-	-	7	6
Winchester,	14	810	60	-	-	1	4
Wilmington,	1	27	-	-	-	-	-
Weston,	3	61	-	-	-	-	-
Totals,	594	25,470	11,754	3	1	335	196

Digitized by Google

DISTRICT No. 1, ... CHARLES E. BURFITT, *Inspector.*

NAME OF FACTORY OR WORKSHOP.	Goods Manufactured.	Number Employed.				Sanitary Condition.	Orders Given.	Compliances.
		Males.	Females.	Under 14.	14 to 16.			
AYER.								
Ayer Tanning Co., . . .	Leather, . .	50	–	–	–	Fair, .	Guard set screws and gears, . .	Complied.
W. T. Piper & Co., . . .	Vinegar, . .	15	–	–	–	Good, .	Strengthen post to elevator, . .	Complied.
Bay State Wood Rim Co., . .	Wood rims, . .	10	–	–	–	Good, .	Guard set screws and belts, . .	Complied.
Levi W. Phelps, ...	House finish, .	26	–	–	2	–	Procure school certificate, . .	Complied.
W. O. Taylor, ...	Furniture, . .	20	–	–	3	–	Procure school certificate, . .	Complied.
J. C. Pillman & Co., . . .	Preserves, . .	4	10	–	1	–	Procure school certificate, . .	Complied.
ARLINGTON.								
Theodore Schwamb Co., . .	Piano cases, . .	20	–	–	–	–	Guard set screws; repair elevator safety.	Complied.
GLEASON DALE.								
Gleason Dale Mills, . . .	Woollen goods, .	54	23	–	5	–	Procure school certificate; guard set screws, engine belt and fly wheel.	Complied.
ACTON.								
B. M. Kimball & Son, . .	Leather, . .	26	–	–	–	Fair, .	Guard set screws, ...	Complied.
G. V. Bowen, ...	Shoddy, . .	9	–	–	2	Good, .	Procure school certificate, . .	Complied
Hall Brothers, ...	Pails, . . .	15	–	–	–	Poor, .	Clean privies, ...	Complied.
Whitcomb & Lawrence, . .	Overalls, . .	3	12	–	–	Good, .	Rail stairs, ...	Complied.
T. R. Knowlton, ...	Cigars, . . .	5	30	–	–	Good, .	Guard set screws, ...	Complied.

Digitized by Google

CONCORD.								
Wood Publishing Co.,	Printing,	2	18	–	–	Good,	Post time tables,	Complied.
G. A. Conant,	Bluine,	16	46	–	–	Good,	Post time tables,	Complied.
CAMBRIDGE.								
D. Bartlett,	Pottery,	7	–	–	1	Fair,	Procure school certificate; post time table; guard set screws.	Complied.
A. Johanson,	Iron goods,	5	–	–	–	Poor,	Build water-closet,	Complied.
A. B. & E. L. Shaw,	Furniture,	75	–	–	–	Good,	Post time tables; guard set screws and band saw.	Complied.
Keeler & Co.,	Furniture,	35	–	–	–	–	Post time table,	Complied.
W. C. Badger & Co.,	Furniture,	40	–	–	1	–	Procure certificate,	Complied.
Bay State Laundry,	Laundry,	4	29	–	–	Good,	Post time table,	Complied.
University City Laundry,	Laundry,	31	131	–	4	Good,	Repair safety on elevator and gate; procure new rope; procure school certificate.	Complied.
Cambridge Bundle Wood Co.,	Kindlings,	14	–	–	1	Good,	Procure certificate,	Complied.
Irving & Casson,	Furniture,	115	–	–	–	–	Guard band saw; repair signal to engineer.	Complied.
Charles River Stone Co.,	Cut stone,	100	–	–	–	Good,	Post time table; guard belts,	Complied.
James H. Roberts,	Machinery,	14	–	–	–	Good,	Guard belts and fly wheel,	Complied.
Seelye Mfg. Co.,	Machinery,	14	–	–	–	Good,	Guard planer,	Complied.
Jensen Bros.,	Candy,	10	1	–	–	Good,	Repair elevator safety; post time table.	Complied.
H. J. Bushway,	Candy,	4	2	–	–	Good,	Post time table; designate water-closet.	Complied.
Edward W. Wheeler,	Printer,	6	4	–	–	Good,	Guard set screws,	Complied.
Charles Pierce & Co.,	Tinware,	17	–	–	–	Good,	Guard belts,	Complied.
Hall Bros.,	Machinery,	7	–	–	–	Good,	Repair elevator,	Complied.
H. M. Sawyer,	Oil goods,	26	62	–	–	Good,	Guard sewing-machine shaft,	Complied.
Revere Sugar Refinery,	Sugar,	150	–	–	–	Good,	Guard belt,	Complied.

Digitized by Google

DISTRICT NO. 1 — *Continued.*

NAME OF FACTORY OR WORKSHOP.	Goods Manufactured.	Number Employed.				Sanitary Condition.	Orders Given.	Compliances.
		Males.	Females.	Under 14.	14 to 16.			
CAMBRIDGE — *Continued.*								
R. H. Leach,	Candy,	4	3	–	–	Good,	Repair water-closet door,	Complied.
James C. Davis & Co.,	Soap,	25	2	–	–	Good,	Guard set screws,	Complied.
Wm. Campbell & Co.,	Boilers,	19	–	–	1	Good,	Procure certificate,	Complied.
Bay State Metal Co.,	Metal goods,	55	–	–	–	Good,	Guard belts,	Complied.
Geo. Page Box Co.,	Boxes,	90	–	–	1	Good,	Guard belts; post time table; procure school certificate.	Complied.
BTE								
Reversible Collar Co.,	Collars,	50	40	–	–	Good,	Guard fly wheel, gears and pulley,	Complied.
Lombard & Caustic,	Printers,	13	4	–	–	Good,	Repair elevator gate,	Complied.
Seavey Mfg. Co.,	Tinware,	68	24	–	3	Good,	Repair elevator safety,	Complied.
Boston Woven Hose Co.,	Hose,	475	225	–	14	Good,	Guard set screws and band saw; procure school certificate.	Complied.
A. S. Perry,	Toe calks,	6	–	–	–	Fair,	Guard set screws,	Complied.
E. M. Muller,	Tannery,	25	–	–	–	Fair,	Guard belts,	Complied.
Laminar Fiber Co.,	Roving cans,	31	–	–	–	Good,	Post time table; repair elevator,	Complied.
University Press,	Books,	257	140	–	–	Good,	Guard fly wheels and set screws,	Complied.
A. H. Hewes,	Pottery,	95	30	–	–	Good,	Repair safety device on elevator; rail stairs; build ladder for fire-escape.	Complied.
Adolph Summer,	Viscol,	4	–	–	–	Good,	Repair safety to elevator; guard fly wheel and crank shaft.	Complied.
Damon Safe Co.,	Safes,	35	–	–	–	Good,	Guard fly wheels and crank shaft to engine and fly wheel to large punch.	Complied.

Digitized by Google

Oliver B. Graves,	Printer,	5	4	–	1	Good,	Procure certificate,	Complied.
D. C. Scranton,	House finish,	4	–	–	–	Good,	Guard set screws,	Complied.
W. F. Murray,	Shirts,	5	35	–	–	Good,	Guard sewing-machine shaft,	Complied.
Clark Alden Co.,	Nut coffee,	3	–	–	–	Fair,	Guard belts and set screws,	Complied.
Automatic Musical Instrument Co.	Banjos,	3	4	–	–	Good,	Post time tables,	Complied.
Harvard Piano Co.,	Piano,	50	–	–	1	Good,	Procure certificate,	Complied.
Geo. W. Gale,	House finish,	21	–	–	1	Good,	Guard clutch,	Complied.
Boston Piano Hammer Co.,	Piano hammers,	14	–	–	–	Good,	Procure certificate,	Complied.
M. F. Tracey,	Finish,	8	–	–	–	Good,	Guard set screws; repair floor,	Complied.
N. M. Corfran,	Brick,	60	–	–	–	Fair,	Guard shaft and gears,	Complied.
M. W. Lands,	Brick,	75	–	–	–	Fair,	Guard shaft and gears,	Complied.
L. E. DeRosay,	Brick,	37	–	–	–	Fair,	Guard shaft,	Complied.
John P. Squires,	Meat,	784	2	–	–	Good,	Guard set screws, crank of ice machine, also swing saw.	Complied.
W. L. Lockhart & Co.,	Caskets,	90	8	–	–	Good,	Repair elevator; guard belts,	Complied.
Turner's Laundry,	Laundry,	1	4	–	–	Good,	Post time tables,	Complied.
Geo. F. Blake,	Pumps,	826	–	–	3	Good,	Post time tables; procure certificate,	Complied.
Boston Bridge Co.,	Bridges,	75	–	–	–	Fair,	Guard fly wheel and set screws,	Complied.
J. F. Facey,	Printer,	6	4	–	–	Good,	Guard fly wheel; post time table; designate water-closet.	Complied.
Co-operative Printing Co.,	Printers,	12	4	–	–	Good,	Guard fly wheel; post time table; designate water-closet.	Complied.
Herman L. Hoffman,	Sausages,	8	–	–	–	Good,	Guard set screws,	Complied.
Chelmsford Foundry,	Foundry,	25	–	–	–	Good,	Guard crank shaft,	Complied.
J. L. Collins,	Iron goods,	12	–	–	–	–	Guard belts and set screws; post time tables.	Complied.
Sylvester Tower,	Piano actions,	246	66	–	11	Good,	Guard belt crank to planer; procure certificate.	Complied.
Ginn Co.,	Books,	200	120	–	2	Good,	Guard fly wheels and set screws,	Complied.
Mason & Hamlin,	Pianos,	200	–	–	–	Good,	Guard pulleys,	Complied.

Digitized by Google

DISTRICT NO. 1 — *Continued.*

NAME OF FACTORY OR WORKSHOP.	Goods Manufactured.	Number Employed.				Sanitary Condition.	Orders Given.	Compliances.
		Males.	Females.	Under 14.	14 to 16.			
CAMBRIDGE — *Concluded.*								
Rawson & Morisson,	Machinery,	65	–	–	–	Good,	Guard engine,	Complied.
Riverside Boiler Works,	Boilers,	22	–	–	–	Good,	Guard belts and set screws,	Complied.
Henry Thayer & Son,	Drugs,	47	62	–	7	Good,	Post time tables; guard belts to elevator; keys in couplings.	Complied.
Ivers & Pond,	Pianos,	146	–	–	–	Good,	Guard band saw set screws; post time tables.	Complied.
American Rubber Co.,	Rubber goods,	400	800	–	3	Good,	Guard gears; procure certificate,	Complied.
Morss & Whyte,	Metal goods,	200	14	–	1	Good,	Guard set screws, gears and elevator.	Complied.
EVERETT.								
Andrews & Co.,	Shoes,	100	50	3	10	Good,	Place spring lock on rear door,	Complied.
P. V. Allen & Co.,	Finish,	18	1	–	–	Good,	Guard set screws,	Complied.
L. C. Norton,	Door check,	15	–	–	–	Good,	Rail stairs,	Complied.
N. E. Iron Co.,	Iron,	90	–	–	–	Good,	Post time tables,	Complied.
G. W. Bent,	Bedsteads,	46	–	–	–	Good,	Guard motor,	Complied.
H. D. Lloyd,	Preserves,	4	3	–	–	Good,	Post time tables,	Complied.
Faxon Mfg. Co.,	Castings,	57	–	–	1	Good,	Guard set screws, end of shaft; file school certificate.	Complied.
L. Libbman,	Tinware,	8	1	–	–	Good,	Guard elevator opening,	Complied.
BEDFORD.								
Boston Wood Rim Co.,	Wood rims,	75	–	–	–	Good,	Guard fly wheel, driving belt and set screws.	Complied.

Digitized by Google

Burlington.								
Wm. E. Carter,	Shoe stock,	12	11	–	–	Fair,	Guard set screws; repair privies; guard belts.	Complied.
Groton.								
E. H. Small,	Counters,	6	1	–	1	Poor,	Guard set screws; box belts; post time tables.	Complied.
A. H. Tompson,	Boxes,	3	–	–	–	Poor,	Box belts,	Complied.
Groton School Laundry,	Laundry,	2	7	–	–	Good,	Post time table; guard fly wheel,	Complied.
Hudson.								
Stow, Bill & Hawley,	Shoes,	225	75	–	7	Good,	Repair fire escape; provide new driving belt to engine.	Complied.
C. J. Sawyer,	Boxes,	14	10	–	–	Good,	Guard set screws,	Complied.
F. Brigham & Co.,	Shoes,	175	100	–	2	Good,	Guard sewing machines, gears and pulleys; repair trap to elevator.	Complied.
C. M. Brett & Co.,	Shoes,	170	80	–	–	Good,	Guard set screws,	Complied.
Hudson Worsted Co.,	Worsted,	12	2	–	–	Good,	Guard fly wheel and belt,	Complied.
Hudson Spinning Co.,	Yarn,	6	24	–	2	Good,	Guard set screws and fly wheel; file school certificate.	Complied.
Novelty Box Co.,	Boxes,	6	11	–	1	Good,	Guard set screws,	Complied.
Enterprise Printing Co.,	Printing,	8	–	–	–	Good,	Guard set screws,	Complied.
Roberts & Larkin,	Finish,	8	–	–	–	Fair,	Guard belts and set screws,	Complied.
Dun, Green & Co.,	Leather,	100	–	–	–	Good,	Guard mills, set screws and belts,	Complied.
Apsley Rubber Co.,	Rubber goods,	107	120	–	4	Good,	Guard gears, set screws and fly wheel; file school certificate.	Complied.
Lexington.								
Lexington Gas Co.,	Electric light,	4	–	–	–	Good,	Guard fly wheel,	Complied.
Littleton.								
Conant & Houghton,	Suspenders,	27	24	–	1	Good,	File school certificate; guard set screws.	Complied.

Digitized by Google

DISTRICT NO. 1 — *Continued.*

NAME OF FACTORY OR WORKSHOP.	Goods Manufactured.	Number Employed.				Sanitary Condition.	Orders Given.	Compliances.
		Males.	Females.	Under 14.	14 to 16.			
LITTLETON — *Concluded.*								
Avery Chemical Co.,	Chemicals,	14	–	–	–	Good,	Guard set screws; repair elevator safety.	Complied.
F. C. Hartwell,	Finish,	6	–	–	–	–	Guard belt shaft and fly wheel,	Complied.
MAYNARD.								
Harriman Brothers,	Laundry,	13	30	–	1	Fair,	Clean privies; guard coupling pins; guard pulleys.	Complied.
MEDFORD.								
Medford Steam Laundry,	Laundry,	12	21	–	–	Good,	Guard set screws,	Complied.
United States Rubber Co.,	Rubber goods,	34	11	–	6	Good,	Guard set screws; rail stairs; file school certificate; post time table; repair elevator safety device.	Complied.
E. Teel & Co.,	Wagons,	50	–	–	–	Fair,	Guard belts,	Complied.
Oliver Whyte,	Iron goods,	26	–	–	–	Fair,	Guard fly wheel and belts,	Complied.
Joseph M. Wood & Son,	Bleaching,	22	11	–	–	Good,	Guard gears,	Complied.
J. Remison & Co.,	Furniture,	10	1	–	–	Good,	Post time tables,	Complied.
Holmes & Smith,	Laundry,	2	2	–	–	Fair,	Post time tables; guard belt; designate water-closets.	Complied.
James M. Mann,	Finish,	3	–	–	–	Fair,	Guard set screws,	Complied.
Bartlett Lumber Co.,	Finish,	12	–	–	–	Fair,	Guard belts,	Complied.
Bay State Brick Co.,	Bricks,	130	–	–	–	Fair,	Guard shaft,	Complied.

Digitized by Google

MALDEN.								
C. T. Joslyn,	Preserves,	28	8	–	1	Good,	Guard elevator opening,	Complied.
Mills & Speeren,	Minerals,	4	–	–	–	Fair,	Guard belt shaft and elevator openings.	Complied.
Charles Neidneer,	Hose,	5	9	–	2	Good,	Guard electric motor,	Complied.
Globe Electric Light Co.,	Electric lamps,	7	13	–	1	Good,	Guard fly wheel belt; clean privies,	Complied.
Malden Stock Laundry,	Laundry,	2	22	–	–	Good,	Post time table,	Complied.
Fiber Buckskin Mfg. Co.,	Bicycle handles,	19	3	–	–	Good,	Guard fly wheel and belts,	Complied.
Massachusetts Cordage Co.,	Cordage,	4	17	–	–	Fair,	Clean privies,	Complied.
Middlesex Last Co.,	Lasts,	24	–	–	–	Good,	Post time tables,	Complied.
Jordan & Christie,	Brushes,	20	40	–	–	Good,	File school certificate,	Complied.
N. B. Bowser,	Finish,	15	–	–	–	Poor,	Guard fly wheel,	Complied.
L. L. Libbey,	Finish,	8	–	–	–	Poor,	Guard belts and set screws,	Complied.
Malden Moulding Co.,	Mouldings,	35	–	–	2	Poor,	Build privies,	Complied.
Clark Hose Co.,	Hose,	5	–	–	–	Good,	Guard fly wheel; rail boiler pit,	Complied.
Lud C. Havner,	Plating,	1	4	–	–	Good,	Post time table; guard fly wheel,	Complied.
Malden Last Co.,	Lasts,	30	–	–	–	Good,	Guard fly wheel and platform in engine room.	Complied.
Robertson Brothers Co.,	Soap,	22	60	–	–	Good,	Guard belts,	Complied.
Malden News,	Printing,	2	5	–	–	Good,	Guard set screws; file school certificate.	Complied.
Geo. E. Dunbar,	Printer,	4	2	–	–	Good,	Guard set screws; file school certificate.	Complied.
A. G. Brown,	Printer,	6	1	–	1	Good,	File school certificate; post time table.	Complied.
Wiggens & Stephens,	Sandpaper,	26	6	–	–	Fair,	Repair elevator gates; guard set screws.	Complied.
Renew Lamp Co.,	Lamps,	5	10	–	–	Good,	Post time tables,	Complied.
S. W. Gould,	Drugs,	12	6	–	–	Poor,	Guard set screws, fly wheel and crank shaft.	Complied.
Geo. Watson,	Bindery,	2	6	–	–	Fair,	Post time tables,	Complied.

Digitized by Google

DISTRICT NO. 1 — *Continued.*

NAME OF FACTORY OR WORKSHOP.	Goods Manufactured.	Number Employed.				Sanitary Condition.	Orders Given.	Compliances.
		Males.	Females.	Under 14.	14 to 16.			
MALDEN — *Concluded.*								
Wadsworth, Howland Co.,	Paint,	40	10	–	2	Good,	Post time table; guard set screws; file certificate.	Complied.
Boston Rubber Shoe Co.,	Rubber goods,	866	856	–	–	Good,	Guard gears and set screws,	Complied.
Webster Co.,	Leather,	200	–	–	1	Good,	Guard crank to jack-roller gears; file school certificate.	Complied.
W. B. Keen,	Wagons,	19	–	–	–	Fair,	Post time tables,	Complied.
N. E Laundry Co.,	Laundry,	30	25	–	2	Good,	File school certificate; guard set screws and wheel to mangle; post time table.	Complied.
H. W. Whitemore,	Printing,	4	1	–	1	Good,	Guard set screws; post time tables; file school certificate.	Complied.
Malden Evening Mail,	Printing,	5	4	–	–	Fair,	Post time table; file school certificate; ventilate water-closet.	Complied.
MELROSE.								
G. E. Young,	Laundry,	7	12	–	–	Good,	Post time table,	Complied.
H. J. Doane,	Furniture,	2	–	–	–	Fair,	Guard set screws,	Complied.
A. W. Chesterton,	Packing,	13	1	–	–	Good,	Guard belts,	Complied.
Shepard Mfg. Co.,	Plating,	16	3	–	–	Good,	Guard set screws,	Complied.
Frost & Hewes,	Grocer,	8	2	–	–	Poor,	Provide privies,	–
Brock Bros.,	Plumbers,	10	1	–	–	Poor,	Provide privies,	–
L. H. Rich,	Fish market,	3	–	–	–	Poor,	Provide privies,	–
Smith Bros.,	Repairing,	7	–	–	–	Poor,	Provide privies,	–

Digitized by Google

READING.								
Horton Mfg Co.,	Brushes,	11	7	–	–	Good,	Provide new saw table,	Complied.
O. P. Simonds,	Boxes,	12	–	–	–	Good,	Guard belts,	Complied.
Chas. E. Damon & Co.,	Neckties,	6	40	–	–	Good,	Guard sewing machines,	Complied.
E. B. Richardson,	Shoes,	22	11	–	–	Good,	Guard set screws; designate water-closet.	Complied.
Hay & Chase,	Shoes,	20	10	–	–	Good,	Guard set screws; rail stairs,	Complied.
J. B. McLane,	Wagons,	17	–	–	–	Fair,	Guard set screws,	Complied.
S. E. Abbott,	Shoes,	15	15	–	–	Good,	Guard set screws,	Complied.
PEPPERELL.								
Gregory & Shaw Co.,	Shoes,	357	83	–	34	Good,	Guard set screws; repair elevator,	Complied.
Nashua River Paper Co.,	Paper,	165	41	–	1	Good,	Guard set screws; guard elevator opening.	Complied.
Pepperell Card Paper Co.,	Card paper,	62	19	–	–	Good,	Guard set screws,	Complied.
SHIRLEY.								
E. A. Edgerton Mfg. Co.,	Suspenders,	190	160	–	17	Good,	File school certificate,	Complied.
Sampson Cordage Co.,	Cordage,	70	50	–	3	Good,	Repair elevator,	Complied.
SUDBURY.								
Hulbert & Rogers,	Machinery,	13	–	–	–	Good,	Guard set screws,	Complied.
STONEHAM.								
L. V. Colahan,	Shoes,	12	24	–	–	Good,	New treads on stairs; repair floor,	Complied.
W. F. Fletcher,	Boxes,	16	18	–	–	Good,	Repair elevator,	Complied.
O. S. Marston,	Machinery,	2	–	–	–	Good,	Guard belts,	Complied.
Blank Bros.,	Leather,	15	–	–	–	Fair,	Guard mills and engine,	Complied.
F. L. & W. E. Whittier,	Printers,	4	–	–	–	Fair,	Guard set screws,	Complied.
H. B. Tucker,	Shoe stock,	23	15	–	–	Good,	Guard elevator opening,	Complied.

Digitized by Google

DISTRICT NO. 1 — *Continued.*

NAME OF FACTORY OR WORKSHOP.	Goods Manufactured.	Number Employed.				Sanitary Condition.	Orders Given.	Compliances.
		Males.	Females.	Under 14.	14 to 16.			
STONEHAM — *Concluded.*								
G. M. Green & Co.,	Shoe tips,	2	2	–	–	Good,	Post time notice; guard set screws and elevator opening.	Complied.
H. B. Jenkins & Co.,	Shoes,	161	39	–	–	Good,	Rail stairs; post time table,	Complied.
Fitzgerald,	Leather,	13	–	–	–	Fair,	Guard driving belt; repair elevator,	Complied.
J. H. Hansell,	Shoe stock,	8	7	–	–	Good,	Guard press and elevator gears,	Complied.
G. W. Newhall,	Shoes,	12	–	–	–	Good,	Guard set screws; post time tables,	Complied.
Wm. Tidd & Co.,	Leather,	138	–	–	–	Good,	Guard mills and set screws; repair elevator.	Complied.
Henry Bois & Son,	Shoe stock,	15	10	–	–	Good,	Guard set screws,	Complied.
SOMERVILLE.								
H. G. Brown,	Finish,	8	–	–	–	Good,	Guard belts and set screws,	Complied.
Middlesex Bleachery,	Bleaching,	200	32	–	1	Good,	Guard fly wheel and gears,	Complied.
P. Forg,	Hardware,	28	–	–	–	Good,	Post time tables,	Complied.
Skilton & Foot Co.,	Preserves,	6	20	–	–	Good,	Repair trap door,	Complied.
Sprague Hathaway Co.,	Frames,	75	50	–	–	Good,	Guard elevator,	Complied.
W. N. Rogers,	Laundry,	4	20	–	–	Good,	Post time table,	Complied.
M. W. Carr,	Jewelry,	100	140	–	4	Good,	File school certificate,	Complied.
Electric Light Station,	Light,	10	–	–	–	Good,	Guard belts and fly wheel,	Complied.
Williams Table Factory,	Finish,	12	–	–	–	Good,	Guard set screws and fly wheel,	Complied.
Union Glass Co.,	Glass,	116	9	–	8	Fair,	Guard set screws; repair floor; guard elevator; file school certificate.	Complied.

Digitized by Google

Wickstead & Co.,	Infants' goods,	1	10	-	-	Poor,	Provide water-closet; post time table; guard electric motor.	Complied.
J. B Gardner,	Upholstering,	4	-	-	-	Fair,	Post time table,	Complied.
F. B Colby,	Laundry,	9	36	-	1	Good,	File school certificate,	Complied.
North Packing Co.,	Meat,	930	7	-	19	Good,	Guard set screws,	Complied.
N. E. Dressed Meat Co.,	Meat,	244	2	-	-	Good,	Guard set screws,	Complied.
E. L Orcutt,	Machinery,	2	-	-	-	Fair,	Guard set screws,	Complied.
Townsend.								
Spaulding Bros. Co.,	Paper board,	37	5	-	2	Fair,	Guard set screws; file school certificate.	Complied.
Wakefield.								
Harvard Knitting Co.,	Knit goods,	143	138	-	-	Good,	Guard sewing-machine belts and fly wheel to engine.	Complied.
C. H. Cox,	Laundry,	6	12	-	-	Good,	Guard belts,	Complied.
Wakefield Rattan Co.,	Rattan,	450	150	-	11	Good,	File school certificate; designate water-closet.	Complied.
A. W. Brownell,	Printers,	3	2	-	-	Good,	Guard set screws,	Complied.
Cutter Bros.,	Grist mill,	5	-	-	-	Good,	Repair elevator,	Complied.
Waltham.								
Boston Mfg. Co.,	Cotton goods,	600	800	-	69	Good,	Repair elevator door; guard belt to dynamo; file school certificate.	Complied.
American Laundry,	Laundry,	3	47	-	-	Good,	Repair elevator,	Complied.
American Crayon Co.	Crayons,	4	-	-	-	Good,	Guard set screws; repair floor; guard elevator gears.	Complied.
Free Press,	Printers,	6	4	-	-	-	Post time tables,	Complied.
O'Hara Dial Co.,	Dials,	57	66	-	-	Good,	Guard set screws and tumblers; post time tables.	Complied.
Waltham Screw Co.,	Screws,	18	7	-	-	Good,	Guard driving belt and fly wheel,	Complied.
Judson L. Thompson Co.,	Rivets,	114	22	-	13	Good,	Guard tumblers and set screws,	Complied.

Digitized by Google

DISTRICT NO. 1 — *Continued.*

NAME OF FACTORY OR WORKSHOP.	Goods Manufactured.	Number Employed.				Sanitary Condition.	Orders Given.	Compliances.
		Males.	Females.	Under 14.	14 to 16.			
WALTHAM — *Concluded.*								
Waltham Bleachery,	Bleaching,	247	13	–	–	Good,	Guard belts and gears,	Complied.
Davis & Farnum,	Foundry,	160	–	–	–	Good,	Guard set screws,	Complied.
Alfred Tomlin,	Knit goods,	8	3	–	–	Fair,	Guard sewing-machine shaft,	Complied.
WAYLAND.								
Charles W. Dean,	Shoes,	180	30	–	3	Good,	Clear for fire-escape; guard set screws, sewing machines and elevator.	Complied.
Williams Shoe Co.,	Shoes,	20	5	–	–	Fair,	Post time tables; designate water-closet; repair elevator.	Complied.
N. C. Griffin,	Shoes,	115	20	–	2	Poor,	Clean and repair privies; post time tables; guard elevator.	Complied.
Caswell Brothers,	Shoes,	20	4	–	–	Fair,	Repair skirt board to sewing machines.	Complied.
Ricker & Lameram,	Shoes,	12	1	–	1	–	Post time tables; file school certificate.	Complied.
WILMINGTON.								
Perrey & Harriman,	Leather,	27	–	–	–	Fair,	Guard mills, pulley set screws and elevator openings.	Complied.
WESTON.								
C. A. Freeman,	Screens,	6	–	–	–	Fair,	Guard set screws,	Complied.
Ralph Kenny,	Chairs,	5	–	–	–	Fair,	Guard belts,	Complied.

Digitized by Google

WOBURN.								
A. L. Richardson,	Laundry,	115	135	–	–	Good,	Guard belts,	Complied.
Russell Counter Co.,	Counters,	80	120	–	4	Fair,	Guard gears,	Complied.
Shedd & Crane,	Leather,	15	–	–	–	Fair,	Guard belts,	Complied.
Geo. A. Simonds & Co.,	Shoe stock,	9	31	–	4	Good,	Guard set screws,	Complied.
J. B. Murry,	Leather,	40	16	–	–	Fair,	Guard belts; repair elevator,	Complied.
Stephen Dow & Co.,	Leather,	80	–	–	–	Good,	Box belts,	Complied.
H. S. Crombie & Co.,	Rivets,	4	2	–	–	Fair,	Designate water-closet; post time tables.	Complied.
E. C. Cottle & Son,	Leather,	83	–	–	–	Fair,	Guard belts and set screws,	Complied.
W. P. Fox & Son,	Leather,	35	–	–	–	Fair,	Repair elevator,	Complied.
E. Cummings & Co.,	Leather,	15	–	–	–	Fair,	Guard belts and set screws,	Complied.
Middlesex Leather Co.,	Leather,	130	–	–	–	Fair,	Repair elevator; guard belts,	Complied.
Beggs & Cobb,	Leather,	75	–	–	–	Fair,	Guard elevator and belts,	Complied.
James Skinner Leather Co.,	Leather,	75	–	–	–	Fair,	Guard belts, set screws and mills,	Complied.
B. F. Kimbell,	Leather,	20	–	–	–	Fair,	Guard set screws, belts, mill and elevator; rail stairs.	Complied.
Woburn Light & Power Co.,	Electric lights,	17	–	–	–	Poor,	Provide privies,	Complied.
Mahoney & Ring,	Shoe stock,	18	–	–	–	Fair,	Guard pulleys, gears and set screws,	Complied.
E. R. Rollins, Jr.,	Shoe stock,	7	7	–	–	Fair,	Guard set screws and gears; post time table.	Complied.
W. P. Fox & Son,	Leather,	40	–	–	–	Fair,	Guard set screws and shaft,	Complied.
Griffen Place,	Shoe stock,	3	27	–	–	Good,	Guard fly wheel,	Complied.
Fawel Bros.,	Belt knives,	25	–	–	–	Fair,	Guard set screws, fly wheel and shaft.	Complied.
Pontascote Leather Co.,	Varnish,	9	–	–	–	Good,	Guard set screws,	Complied.
Merrimac Chemical Co.,	Chemicals,	106	–	–	–	Fair,	Guard set screws and fly wheel; repair elevator.	Complied.
WINCHESTER.								
Arthur E. Whitney,	Machinery,	10	–	–	–	Fair,	Guard belts and set screws,	Complied.
Metallic Screen Co.,	Screens,	9	–	–	–	Fair,	Guard set screws,	Complied.

Digitized by Google

DISTRICT NO. 1 — *Concluded.*

NAME OF FACTORY OR WORKSHOP.	Goods Manufactured.	Number Employed.				Sanitary Condition.	Orders Given.	Compliances.
		Males.	Females.	Under 14.	14 to 16.			
WINCHESTER — *Concluded.*								
C. H. Jerdon,	Leather,	4	–	–	–	Fair,	Guard set screws and mills,	Complied
Blank Bros,	Leather,	13	–	–	–	Fair,	Guard mills,	Complied.
C. M. Bacon,	Buffing wheels,	28	8	–	–	Good,	Guard set screws and pulling mill,	Complied.
Beggs & Cobb,	Leather,	250	–	–	–	Fair,	Guard set screws and mills,	Complied.
Runsturna Mfg. Co.,	Tags,	12	44	–	4	Good,	Guard set screws and pulleys; repair elevator; post time tables.	Complied.
Young & Wilcox,	Laundry,	8	4	–	–	Poor,	Post time tables; guard belts and shaft; provide water-closet.	Complied.

Digitized by Google

DISTRICT No. 2, ... JOSEPH HALSTRICK, *Inspector*.

NAME OF FACTORY OR WORKSHOP.	Goods Manufactured.	Number Employed.				Sanitary Condition.	Orders Given.	Compliances.
		Males.	Females.	Under 14.	14 to 16.			
BOSTON.								
Boston Braid Mfg. Co.,	Dress trimmings and braid.	3	12	–	1	Good,	Certificate for minor; designate water-closets.	Complied.
C. H. Farrell & Co.,	Wood workers,	10	–	–	–	Good,	Guard set screws,	Complied.
R. T. Purcell,	Wood turning,	2	–	–	–	Good,	Guard belting,	Complied.
J. G. Clark,	Stair builder,	5	–	–	–	Good,	Guard driving belt,	Complied.
Mackintosh Mfg. Co.,	Shoe threads,	1	6	–	–	Good,	Post time notice,	Complied.
Norton Hand Laundry,	Laundry,	–	2	–	–	Good,	Post time notice,	Complied.
C. Wolfsum,	Sausage,	2	–	–	–	Fair,	Guard belting,	Complied.
City Hospital,	Laundry,	–	–	–	–	Good,	Guard wheels and generator to dynamos.	Complied.
J. F. Merrill,	Cotton thread,	3	2	–	–	Good,	Post time notice,	Complied.
Suburban Light and Power Co.,	Electric power,	10	–	–	–	Good,	Guard fly wheels,	Complied.
A. P. Bicknell,	Printing,	13	1	–	2	Good,	Post time notice,	Complied.
A. J. Houghton,	Beer brewing,	40	–	–	–	Good,	Guard belting and pulleys to the grain conveyers.	Complied.
Frank Mackey,	Tailoring,	34	11	–	–	Fair,	Provide extra water-closet; post time notice.	Complied.
J. Abrahams,	Tailoring,	2	1	–	–	Good,	Post time notice,	Complied.
Pitts Hosiery Co.,	Hosiery,	–	7	–	–	Good,	Post time notice,	Complied.
A. C. Berry,	Engraving,	3	–	–	1	Good,	Certificate for minor,	Complied.
Boston Music Co.,	Sheet music,	9	3	–	–	Good,	Certificate for minor,	Complied.

Digitized by Google

DISTRICT NO. 2 — *Continued.*

NAME OF FACTORY OR WORKSHOP.	Goods Manufactured.	Number Employed.				Sanitary Condition.	Orders Given.	Compliances.
		Males.	Females.	Under 14.	14 to 16.			
BOSTON — *Continued.*								
H. Kerner,	Tailoring,	4	2	–	–	Good,	Post time notice,	Complied.
P. B. Sanford,	Bookbinding,	8	4	–	–	Fair,	Provide extra water-closet,	Complied.
Olympian Laundry,	Laundry,	4	10	–	–	Fair,	Provide better sanitary arrangements.	Complied.
Proctor & Laman,	Skirts and aprons,	2	20	–	–	Good,	Guard shafting and set screws,	Complied.
Smith, Chase & Cutting,	Tailoring,	9	3	–	–	Good,	Post time notice,	Complied.
G. Sanger,	Cloth caps,	11	5	–	1	Good,	Certificate for minor,	Complied.
Sam'l Alexander,	Tailoring,	21	14	–	2	Good,	Certificate for minor,	Complied.
Henry R. Barry,	Ladies' underwear,	2	8	–	–	Good,	Post time notice,	Complied.
Byers & Parmelee,	Lace curtains,	2	16	–	–	Good,	Post time notice,	Complied.
Ben Levy & Co.,	Perfumery,	2	3	–	–	Good,	Post time notice,	Complied.
H. O. Trafton & Co.,	Ladies' leather belts.	1	4	–	–	Good,	Post time notice,	Complied.
Curtis & Cameron,	Art publishing,	5	1	–	–	Good,	Post time notice,	Complied.
Thos. O'Callaghan & Co.,	Carpets,	6	14	–	–	Good,	Better ventilation,	Complied.
New England Piano Co.,	Pianos,	200	12	–	–	Good,	To pay weekly,	Complied.
Whitemore & Story,	Tailoring,	5	3	–	–	Good,	Post time notice,	Complied.
A. Cohen,	Tailoring,	1	1	–	–	Good,	Post time notice,	Complied.
A. G. Daniels Printing Co.,	Printing,	6	2	–	–	Good,	Post time notice,	Complied.
Seaver Inner Sole Co.,	Inner soles,	1	1	–	–	Good,	Post time notice,	Complied.
New England Skirt Co.,	Ladies' skirts,	–	4	–	–	Good,	Post time notice,	Complied.
Elite Glove Co.,	Kid gloves,	3	7	–	–	Good,	Guard shafting; post time notice,	Complied.

Digitized by Google

Jacob Hawley,	Paper boxes,	4	1	–	–	Good,	Post time notice,	Complied.
Curtis & Weld,	Costumers,	1	3	–	–	Good,	Post time notice,	Complied.
Boston Thread and Twine Co.,	Thread and twine,	130	45	–	9	Good,	Guard set screws,	Complied.
P. Sebastian,	Tailoring,	2	2	–	–	Good,	Post time notice,	Complied.
J. H. Talbot,	Dress making,	–	5	–	–	Good,	Post time notice,	Complied.
Eastern Art Embroidery Works,	Flags and banners,	1	1	–	–	Good,	Post time notice,	Complied.
E. O. Skelton,	Printing,	3	1	–	–	Good,	Post time notice,	Complied.
Bailey & Weston,	Window shades,	6	1	–	–	Good,	Post time notice,	Complied.
P. Lozowski,	Tailoring,	14	9	–	–	Good,	Post time notice,	Complied.
Farrington Printing Co.,	Printing,	12	2	–	–	Good,	Post time notice,	Complied.
Henry Dunner,	Cutlery,	2	–	–	–	Good,	Guard shafting,	Complied.
Wm. Yuszkowsky,	Tailoring,	16	7	–	–	Good,	Post time notice,	Complied.
Boston Overall Mfg. Co.,	Overalls,	–	5	–	–	Good,	Post time notice,	Complied.
Sam'l Hipkiss,	Fancy leather goods.	6	2	–	–	Good,	Post time notice,	Complied.
Brown & Wales,	Cork handles,	5	–	–	1	Good,	Certificate for minor,	Complied.
S. Burrill,	Saw filing and cutlery grinding.	2	–	–	–	Good,	Guard set screws,	Complied.
Dennis Connell,	Tailoring,	1	8	–	–	Good,	Post time notice,	Complied.
Rochester Clothing Co.,	Tailoring,	13	12	–	–	Fair,	Provide extra water-closet; post time notice.	Complied.
M. H. Levy,	Tailoring,	2	1	–	1	Good,	Certificate for minor,	Complied.
J. Sugarman,	Tailoring,	3	3	–	–	Good,	Designate water-closets; post time notice.	Complied.
Hartford Bros,	Shoe machinery,	10	–	–	1	Good,	Certificates for minors,	Complied.
W. E. Martin & Co.,	Shoe dressing,	4	11	–	–	Good,	Post time notice,	Complied.
T. S. Marlof,	Handkerchiefs and aprons.	–	2	–	–	Good,	Post time notice,	Complied.
Tabor, Prang Art Co.,	Lithography,	55	19	–	1	Good,	Guard set screws,	Complied.
Henry Kray,	Fancy goods,	5	28	–	11	Good,	Certificate for minor,	Complied.
R. Magno,	Tailoring,	2	1	–	–	Good,	Post time notice,	Complied.

Digitized by Google

DISTRICT NO. 2 — *Continued.*

NAME OF FACTORY OR WORKSHOP.	Goods Manufactured.	Number Employed.				Sanitary Condition.	Orders Given.	Compliances.
		Males.	Females.	Under 14.	14 to 16.			
BOSTON — *Concluded.*								
I. Gravitz,	Tailoring,	2	2	–	–	Good,	Post time notice,	Complied
Goddard Mfg. Co.,	Tailoring,	4	3	–	–	Good,	Post time notice,	Complied.
J. J. McCarthy,	Tailoring,	2	7	–	–	Fair,	Provide extra water-closet; post time notice.	Complied.
R. T. Hewitson,	Jewelry,	3	2	–	–	Good,	Post time notice,	Complied.
Munroe & Lane,	Gold and silver plating.	5	–	–	–	Good,	Guard set screws,	Complied.
H. Karnow,	Kid gloves,	1	2	–	–	Good,	Post time notice,	Complied.
A. Swanson,	Tailoring,	10	4	–	–	Good,	Post time notice,	Complied.
I. Hackel & Co.,	Tailoring,	5	1	–	–	Good,	Post time notice,	Complied.
Savoy Cloak Co.,	Ladies' cloaks,	–	12	–	–	Good,	Post time notice,	Complied.
Browning, King & Co.,	Clothing,	4	3	–	–	Good,	Post time notice,	Complied.
H Halperin,	Tailoring,	4	4	–	–	Good,	Post time notice,	Complied.
Morrison & Monohan,	Printing,	3	1	–	–	Good,	Guard set screws,	Complied.
D. Wuoti,	Tailoring,	1	3	–	–	Good,	Post time notice,	Complied.
N. E. Fur Co.,	Furs,	–	5	–	–	Good,	Post time notice,	Complied.
Liberty Lamp Co.,	Incandescent lamps.	9	6	–	–	Good,	Post time notice,	Complied.
Franklin Educational Co.,	Laboratory supplies.	8	1	–	–	Good,	Guard set screws,	Complied.
Pierce & Son,	Shoes and slippers.	75	30	–	4	Good,	Certificates for minors,	Complied.

Digitized by Google

W. W. Potter,	Boot and shoe shanks.	39	3	–	–	Good,	Post time notice,	Complied.
Pinkham Press,	Printing,	21	9	–	–	Good,	Post time notice,	Complied.
Walworth Mfg. Co,	Pipers' fittings and tools.	661	–	–	1	Good,	Certificate for minor,	Complied.
Pill & Pickford,	Burlap bags,	11	10	–	–	Good,	Post time notice,	Complied.
Ipswich Mills,	Hosiery,	10	240	2	41	Good,	Certificates for minors,	Complied.
Educational Publishing Co.,	Publishing,	45	30	–	–	Good,	To keep doors unlocked; designate water-closets.	Complied.
A. T. Stearns Lumber Co.,	Builders' finish,	147	–	–	2	Good,	Certificates for minors,	Complied.
New York, New Haven & Hartford Repair Shops.	Engines and cars,	350	–	–	–	Good,	Guard set screws,	Complied.
Franklin.								
Waterman Steam Laundry,	Laundry,	4	8	–	–	Good,	Post time notice,	Complied.
Union Electric Light Co.,	Electric lights,	4	–	–	–	Good,	Guard wheels to dynamo,	Complied.
Franklin Knitting Co.,	Knit goods,	36	14	–	3	Good,	Guard feed pump,	Complied.
H. T. Hayward,	Satinets,	74	56	–	3	Good,	Guard set screws,	Complied.
Framingham.								
Dennison Mfg. Co.,	Paper boxes and tags.	150	350	–	–	Good,	Guard wheels to dynamo and set screws.	Complied.
Holliston.								
C. F. Driscoll,	Boots and shoes,	31	4	–	–	Good,	Certificate for minor,	Complied.
Holliston Yarn Co.,	Woollen yarns,	22	6	–	1	Fair,	Keep water-closets clean; post time notice; guard set screws.	Complied.
Marlborough.								
Geo. A. Howe & Co.,	Wooden boxes,	17	–	–	–	Good,	Guard fly wheel and set screws,	Complied.
Marlboro Awl & Needle Co.,	Awls and needles,	15	2	–	2	Good,	Certificates for minors,	Complied.
John A. Frye,	Shoes,	490	90	–	12	Good,	Keep gates to elevator well closed,	Complied.
S. H. Howe (Diamond A),	Shoes,	175	85	–	8	Good,	Guard set screws,	Complied.

Digitized by Google

DISTRICT NO. 2 — *Concluded.*

NAME OF FACTORY OR WORKSHOP.	Goods Manufactured.	Number Employed.				Sanitary Condition.	Orders Given.	Compliances.
		Males.	Females.	Under 14.	14 to 16.			
MARLBOROUGH — *Concluded.*								
The S. H. Howe Shoe Co.,	Shoes,	475	175	–	10	Good,	Guard driving wheel and crank,	Complied.
Longley Bros.,	Wooden boxes,	20	–	–	–	Good,	Guard fly wheel,	Complied.
Rice & Hutchins (Factory N),	Shoes,	40	25	–	–	Good,	Guard shafting, set screws, gearing, pulleys and belts.	Complied.
Rice & Hutchins,	Shoes,	210	150	–	21	Good,	Guard set screws,	Complied.
Middlesex Shoe Co.,	Shoes,	175	84	–	5	Good,	Guard set screws,	Complied.
Middlesex Towel Supply Co.,	Laundry,	3	1	–	–	Good,	Post time notice; guard belt and pulley to mangle.	Complied.
MILFORD.								
Franklin Iron Foundry,	Iron castings,	27	–	–	–	Good,	Guard set screws,	Complied.
Milford, Holliston & Framingham Street R. R. Power House.	Electric power,	4	–	–	–	Good,	Guard wheels to dynamo,	Complied.
Hamberger Bros.,	– –	–	–	–	–	–	– – –	–
Clapp, Huckins & Temple,	Shoes,	225	125	–	–	Good,	Guard fly wheel,	Complied.
Nolan Bros.,	Cigars,	11	3	–	–	Good,	Post time notice,	Complied.
Wm. B. Hale Cigar Co.,	Cigars,	8	2	–	–	Good,	Post time notice,	Complied.
Acme Steam Laundry,	Laundry,	3	3	–	–	Good,	Post time notice,	Complied.
MEDWAY.								
New England Preservative Food Corporation.	Preserved food,	11	3	–	–	Good,	Guard set screws,	Complied.

Digitized by Google

A. M. Smith,	Boots and shoes,	93	7	–	2	Good,	Guard belting,	Complied.
Cole, Senior & Co.,	Cassimeres,	62	18	–	2	Good,	Guard set screws; certificate for minor.	Complied.
Millis.								
J. M. Herman,	– –	–	–	–	–	–	To prohibit overtime work,	Complied.
Natick.								
Nutt & Pratt,	Shoes,	150	50	–	–	Good,	Guard main belt,	Complied.
J. H. Craig,	Shoes,	22	2	–	1	Good,	Guard set screws & shafting,	Complied.
Sheldon Bros. Co.,	Shoes,	29	6	–	–	Good,	To pay weekly,	Complied.
Johnson, Dale & Aldrich,	Shoes,	115	35	–	2	Good,	Guard fly wheel; certificates for minors.	Complied.
Cloutman, Dunn & Co.,	Shoes,	95	20	–	1	Good,	Guard fly wheel and belting,	Complied.
E. Dowd,	Shoes,	26	2	–	–	Good,	Guard pulleys,	Complied.
Wm. F. Pfieffer,	Shoes,	63	12	–	–	Good,	Guard fly wheel, belt and set screws,	Complied.
Schneider Bros. & Co.,	Shoes,	20	–	–	–	Good,	Guard set screws,	Complied.
Needham.								
J. B. Thorp,	Knit goods,	3	16	–	1	Good,	Certificate for minor,	Complied.
Union Cycle Mfg. Co.,	Bicycles,	200	–	–	1	Good,	Certificate for minor,	Complied.
John F. Brooks,	Knit goods,	4	16	–	–	Good,	Post time notice,	Complied.
Wye Bros,	Knit goods,	5	13	–	–	Good,	Guard set screws,	Complied.
Wellesley.								
Bishop Paper Mills,	Paper,	35	–	–	–	Good,	Guard belts and pulleys to beaters,	Complied.

Digitized by Google

Summary.

Number of inspections,	869
Orders issued,	140
Elevators inspected,	72
Children under fourteen employed,	2
Children between fourteen and sixteen employed,	676
Whole number of males,	21,200
Whole number of females,	12,836
Total number of males and females,	34,714

Digitized by Google

Report of Inspector Isaac S. Mullen.

In reviewing the work performed since the last annual report, there is very little that I can add that would be of any vital importance in connection with the duties incumbent upon the department to enforce.

Regarding general inspection, a ready compliance has always occurred whenever orders have been issued for the better protection and comfort of the employees.

The sanitation of the various places visited has been in a great degree all that could be desired, ventilation more or less good.

But one complaint has been received relative to weekly payments.

The number of fatal elevator accidents has been lessened, caused, no doubt, from the fact that competent and painstaking persons are employed to operate passenger elevators, and more care is used by those having charge of freight elevators in the way and manner of loading them with freight so as not to be dangerous.

The law of 1898, chapter 494, which went into effect September 1, relative to the regulation of the employment of labor, is becoming to be generally understood, and the statute gradually being complied with.

Machinery has been found to be guarded; but few accidents have occurred, and those of a minor character.

Several weeks of special duty somewhat prevented the work of general inspection, thus causing a falling off of inspections of many establishments.

Uniform courtesy has been extended by those whom I have had occasion to visit.

Summary.

Number of inspections made,	1,105
Number of orders issued,	130
Number of compliances,	130
Number of children under fourteen,	4
Number of children between fourteen and sixteen,	18
Number of males employed,	8,705
Number of females employed,	1,474
Total number employed,	10,201
Number of visits made,	200
Number of visits and inspections,	1,305

Digitized by Google

DISTRICT No. 3, ... ISAAC S. MULLEN, *Inspector*.

NAME OF FACTORY OR WORKSHOP.	Goods Manufactured.	Number Employed.				Sanitary Condition.	Orders Given.	Compliances.
		Males.	Females.	Under 14.	14 to 16.			
BOSTON.								
Trimount Candy Co.,	Candy,	3	2	–	–	Fair,	Post time table,	Complied.
Byron Cole,	Perfumery,	3	2	–	–	Fair,	Post time table,	Complied.
Cobb, Bates & Yerxa,	Candy,	35	27	–	3	Good,	Post time table,	Complied.
Merrimac Mattress Co.,	Mattresses,	15	4	–	1	Good,	Post time table,	Complied.
L. F. Gillette,	Photographs,	5	10	–	–	Good,	Post time table,	Complied.
Sarah McAulay,	Dresses,	–	4	–	–	Good,	Post time table,	Complied.
The West End Dress Co.,	Dresses,	1	3	–	–	Good,	Post time table,	Complied.
Carter, Shepard & Co.,	Books,	3	5	–	–	Fair,	Keep outside door unlocked; keep stairways clear; remove all obstacles to tin door on fourth floor.	Complied.
Hill, Stickney & Twitchell,	Furniture,	41	9	–	–	Good,	Post time table,	Complied.
A. McArthur & Co.,	Furniture,	1	4	–	–	Good,	Post time table,	Complied:
London Fur Co.,	Furs,	1	3	–	–	Good,	Post time table,	Complied.
Arthur Connor,	Chemicals,	6	5	–	–	Fair,	Provide water-closet for females; post time table.	Complied.
Poor & Co.,	Awnings,	2	2	–	–	Fair,	Post time table,	Complied.
L. B. Cobb,	Patterns,	4	–	–	–	Fair,	Guard set screws,	Complied.
M. T Downing,	Cigars,	3	2	–	–	Good,	Provide water-closet for females; post time table.	Complied.
E. B. Russell,	Envelopes,	5	12	–	–	Good,	Post time table,	Complied.
Bay State Coat Co.,	Duck coats,	1	3	–	–	Good,	Post time table,	Complied.
Franklin Engraving Co.,	Engraving,	5	–	–	–	Good,	Box belting,	Complied.

Digitized by Google

W. J Franey,	Coats,	–	4	–	–	Fair,	Post time table,	Complied.
L. F. Rogers,	Building,	9	–	–	–	Fair,	Keep water-closet clean,	Complied.
The Writers' Publishing Co.,	Periodicals,	2	4	–	–	Fair,	Provide closet for females,	Complied.
P. H. Kearney,	Coats,	12	3	–	–	Fair,	Post time table,	Complied.
G. R. Willis,	Printing,	10	2	–	–	Fair,	Post time table,	Complied.
West & Jenney,	Chemicals,	3	2	–	–	Good,	Post time table,	Complied.
Massachusetts Ploughman,	Type,	2	4	–	–	Good,	Post time table,	Complied.
M. Goldberg,	Dresses,	2	4	–	–	Fair,	Post time table,	Complied.
John Walsh,	Coats,	3	3	–	–	Fair,	Post time table,	Complied.
New York Merchant Tailoring Co.	Pants,	5	2	–	–	Fair,	Post time table,	Complied.
Herman Sideman & Co.,	Coats,	4	2	–	–	Fair,	Post time table,	Complied.
L. Captolsoto,	Coats,	4	2	–	–	Fair,	Post time table,	Complied.
P. Bagnatio,	Coats,	2	2	–	–	Fair,	Post time table,	Complied.
Hub Tailoring Co.,	Coats,	5	2	–	–	Fair,	Post time table,	Complied.
Cobb Boston Tea Store,	Candy,	7	6	–	–	Good,	Provide closet for females; guard fly wheel; post time table.	Complied.
Beacon Hill Hand Laundry,	Clothes,	1	8	–	–	Good,	Provide water-closet; post time table	Complied.
H. Savinsky,	Coats,	5	2	–	–	Fair,	Post time table,	Complied.
Charles Huriwitz,	Coats,	6	3	–	–	Fair,	Post time table,	Complied.
H Lord,	Coats,	2	2	–	–	Fair,	Post time table,	Complied.
D. Toy,	Coats,	3	8	–	1	Fair,	Post time table,	Complied.
E. C. Nicoli,	Gloves,	2	4	–	–	Fair,	Post time table,	Complied.
J. C. Littlefield,	Coats,	4	10	–	–	Good,	Post time table,	Complied.
Freeman & Co.,	Shirts,	1	3	–	1	Fair,	Post time table; procure certificate,	Complied.
Robert H. Vivian,	Coats,	2	2	–	1	Fair,	Post time table,	Complied.
S. Levinsky,	Coats,	9	3	–	–	Fair,	Post time table,	Complied.
George W. Drown,	Coats,	1	3	–	–	Fair,	Post time table,	Complied.
Morris Hammer,	Coats,	2	2	–	–	Fair,	Post time table,	Complied.
Marks & King,	Coats,	3	4	–	–	Fair,	Closet for females; post time table,	Complied.

Digitized by Google

DISTRICT NO. 3 — *Continued.*

NAME OF FACTORY OR WORKSHOP.	Goods Manufactured.	Number Employed.				Sanitary Condition.	Orders Given.	Compliances.
		Males.	Females.	Under 14.	14 to 16.			
BOSTON — *Continued.*								
Eclipse Waist and Shirt Co.,	Skirts and waists,	2	8	–	–	Fair,	Post time table,	Complied.
P. Valero,	Coats,	3	3	–	–	Fair,	Post time table,	Complied.
H. Carp,	Coats,	3	3	–	–	Fair,	Post time table,	Complied.
Wm. Mee,	Cigars,	4	3	–	–	Fair,	Post time table,	Complied.
G. Wolfe,	Coats,	7	2	–	–	Good,	Post time table,	Complied.
H. P. Aldrich,	Machinery,	4	–	–	–	Fair,	Box belting,	Complied.
W. B. Walker,	Carriage dashers,	4	–	–	–	Fair,	Keep water-closet clean,	Complied.
John Gough,	Metal spinning,	2	2	–	–	Fair,	Post time table,	Complied.
The Columbian,	Magazine,	4	26	–	–	Fair,	Post time table,	Complied.
S. S. Sleeper & Co.,	Various,	10	3	–	–	Fair,	Post time table,	Complied.
Wm. A. Currie,	Printing,	7	3	–	–	Fair,	Post time table,	Complied.
R Woodman Mfg. Co.,	Railroad supplies,	5	1	–	–	Fair,	Procure certificate for boy,	Complied.
The Congo Blacking Mfg. Co.,	Blacking,	2	2	–	–	Fair,	Post time table,	Complied.
Boston Tape Mfg. Co.,	Tape measures,	4	12	–	–	Good,	Provide water-closet for females; post time table.	Complied.
Burnett & Co.,	Perfumery,	10	10	–	–	Good,	Post time table,	Complied.
W. A. Greenough & Co.,	Publishing,	2	6	–	–	Good,	Provide water-closet for females,	Complied.
L. H. Lane,	Printing,	2	8	–	–	Good,	Provide water-closet for females,	Complied.
H. C. Busch Mfg. Co.,	Paper boxes,	5	5	–	–	Good,	Guard belting; post time table,	Complied.
T. H. Young,	Blacking,	2	4	–	–	Fair,	Post time table,	Complied.
Samuel Hanno & Co.,	Manifolds,	15	20	–	–	Fair,	Post time table,	Complied.
Elliott Paper Box Co,	Paper boxes,	2	10	–	–	Fair,	Post time table,	Complied.

Digitized by Google

F. E. Bacon,	Books,	19	6	–	–	Fair,	Post time table,	Complied.
The Model Mfg. Co.,	Brass models,	8	–	–	–	Fair,	Box belting,	Complied.
J. W. Colgan,	Harness ornaments.	16	–	–	–	Good,	Rail dynamo,	Complied.
Dwyer & Co.,	Printing,	8	–	–	–	Good,	Rail dynamo; post time table,	Complied.
The Murphey Hosiery Co.,	Hosiery,	3	4	–	–	Good,	Procure certificate for children; post time table	Complied.
Wade Button Co.,	Buttons,	2	10	–	–	Good,	Post time table,	Complied.
Standard Wrapper Co.,	Wrappers,	2	18	–	–	Good,	Post time table,	Complied.
Mrs. M. A Murray,	Laundry,	–	7	–	–	Fair,	Post time table,	Complied.
Wm. Loftus,	Coats and pants,	5	–	2	–	Good,	To discharge two children employed in show window, under 12 years of age,	Complied.
F. B. Tilton,	Paper boxes,	3	–	12	–	Fair,	Post time table,	Complied.
Peter Dillon,	Books,	3	1	–	–	Fair,	Have window made larger in water-closet; also better ventilation.	Complied.
B. Boosfosky,	Coats,	6	2	–	–	Fair,	Post time table,	Complied.
M. Richmond,	Suspenders,	2	2	–	–	Fair,	Post time table,	Complied.
G. W. Bent & Co.,	Mattresses,	9	14	–	–	Fair,	Post time table,	Complied.
Max Fink,	Ladies' underwear,	1	4	–	–	Fair,	Post time table,	Complied.
D. Snieder & Co.,	Dresses and waists,	8	4	–	–	Fair,	Post time table,	Complied.
The Globe Skirt Mfg. Co.,	Skirts and waists,	2	4	–	–	Fair,	Post time table,	Complied.
N. Cohen,	Dresses,	1	6	–	–	Fair,	Post time table,	Complied.
H. Shapiro,	Skirts,	2	4	–	–	Fair,	Post time table,	Complied.
Miss L. Goldman,	Silk waists,	–	4	–	–	Fair,	Post time table,	Complied.
M. Lienthall,	Dresses and skirts,	10	8	–	–	Fair,	Post time table,	Complied.
Dine Bros.,	Various,	2	2	–	1	Fair,	Post time table,	Complied.
Cousins & Pratt,	Sails,	9	5	–	–	Good,	Post time table,	Complied.
Hyman & Co.,	Waists,	2	12	–	–	Fair,	Post time table,	Complied.
John P. Lovell Arms Co.,	Various,	10	–	–	2	Fair,	Procure certificate for children,	Complied.
Wheeler Reflector Co.,	Reflectors,	13	2	–	–	Fair,	Provide water-closet for females,	Complied.

Digitized by Google

DISTRICT NO. 3 — *Concluded.*

NAME OF FACTORY OR WORKSHOP.	Goods Manufactured.	Number Employed.				Sanitary Condition.	Orders Given.	Compliances.
		Males.	Females.	Under 14.	14 to 16.			
BOSTON — *Concluded.*								
Logan, Johnson & Co.,	Bakers' supplies,	5	7	–	–	Fair,	Post time table; box belting; guard set screws; keep stairs clean.	Complied.
W. S. Locke, Jr.,	Books,	7	4	–	–	Good,	Post time table,	Complied.
Joe Atkin,	Skirts,	7	5	–	–	Fair,	Post time table,	Complied.
Vogt & Sons,	Papier maché,	8	2	–	–	Good,	Post time table,	Complied.
F. W. Daggett,	Candy,	7	18	–	–	Good,	Have elevator arms repaired,	Complied.
Bowdoin Square Mfg. Co.,	Petticoats,	2	4	–	–	Good,	Post time table,	Complied.
S. Sodofoski,	Pants,	5	5	–	–	Fair,	Post time table,	Complied.
M. S. Kondizian,	Coats,	18	7	–	–	Fair,	Post time table,	Complied.
Bernard Slipian,	Coats,	24	6	–	–	Fair,	Post time table,	Complied.
Joseph Rosenberg,	Pants,	40	20	–	–	Fair,	Post time table,	Complied.
Boston Knee & Bicycle Pants Co.,	Pants,	12	10	–	–	Fair,	Post time table,	Complied.
Wm. Schraftt & Sons,	Candy,	35	140	–	–	Good,	Guard set screws; post time table,	Complied.
I. Fienstien,	Coats,	4	2	–	–	Fair,	Post time table,	Complied.
Charles F. Miller,	Candy,	4	2	–	–	Fair,	Post time table,	Complied.
F. L. Daggett & Co.,	Candy,	40	30	–	–	Good,	Post time table,	Complied.
Aldrich & Smith,	Candy,	10	30	–	–	Good,	Post time table,	Complied.
WATERTOWN.								
Crystal Spring Mfg. Co.,	Starch,	6	2	–	–	Fair,	Post time table,	Complied.
Rand, Wayne & Co.,	Carriage tires,	10	–	–	–	Good,	Box belting,	Complied.

Digitized by Google

Report of Inspector Sillars.

Sir: — In making my annual report for the year of the duty performed by me as inspector of this district, I am pleased to state that there has been very little friction in the enforcement of the laws which it has been my duty to see enforced. The orders given during the year have been promptly and cheerfully complied with, and I have found manufacturers at all times willing to do all asked of them to improve the sanitation of their factories; also in regard to ventilation and the guarding of dangerous machinery.

I have had no complaints this year in regard to weekly payment of wages to employees.

No children under 14 years of age were found at work, and but 124 children between fourteen and sixteen years. The employment of school children in this district is year by year getting less. I have found several illiterate minors employed, who were sent to evening school.

Of the 412 orders issued during the year 46 were for school certificates, 105 in relation to time tables, 63 for sanitary improvement, and 198 for guarding machinery, and general factory orders connecting therewith.

There were a few complaints at the commencement of the year in relation to street railroad companies working their conductors and motormen more than ten hours in twelve. Those complaints were settled, and since then I have had no trouble.

In conclusion, I would say that everything seems to be going very smoothly. Each day, of course, brings its new duties, something to be set right, so that an inspector's work is never done. If things are overlooked or neglected, they soon go to the bad, and then it is long, tedious work to bring them back where they belong.

Summary.

	South Boston.	Boston.	East Boston.	Charlestown.	Chelsea.	Revere.	Winthrop.	Totals.
Inspections,	82	212	84	75	86	8	1	498
Orders given,	14	226	49	55	63	5	-	412
Compliances,	14	-	-	-	-	5	-	409
Males employed,	469	3,540	1,849	1,515	2,506	96	10	10,075
Females employed,	29	1,974	161	531	1,000	27	-	2,722
Males, fourteen to sixteen,	-	34	9	3	22	-	-	68
Females, fourteen to sixteen,	-	21	3	8	24	-	-	56
Total employees,	-	-	-	-	-	-	-	12,921
Elevators inspected,	-	-	-	-	-	-	-	28

Digitized by Google

DISTRICT No. 4, ... MALCOLM SILLARS, *Inspector*.

NAME OF FACTORY OR WORKSHOP.	Goods Manufactured.	Number Employed.				Sanitary Condition.	Orders Given.	Compliances.
		Males.	Females.	Under 14.	14 to 16.			
SOUTH BOSTON.								
City Iron Foundry Co.,	Iron castings,	20	–	–	–	Fair,	Cover set screws,	Complied.
Wm. P. Stone & Co.,	Wagons,	25	–	–	–	Fair,	Guard set screws,	Complied.
Consolidated Fastener Co.,	Buttons,	40	7	–	–	Good,	Guard fly wheel; post time tables; designate closets.	Complied.
T. C. Ashley & Co.,	Dye stuff,	4	–	–	–	Good,	Guard engine,	Complied.
T. E. Chase,	Paper stock,	14	12	–	–	Good,	Post time table; designate closets,	Complied.
Compressed Fibre Co.,	Fibre,	12	2	–	–	Good,	Provide exhaust fan,	Complied.
W. Anderson & Co.,	Wagons,	14	–	–	–	Good,	Guard opening,	Complied.
Boston Electric Light Co.,	Light,	12	–	–	–	Good,	Guard belts,	Complied.
Geo. Miles,	Boilers,	11	–	–	–	Fair,	Repair privy,	Complied.
Boston Steel & Iron Co.,	Iron work,	80	–	–	–	Fair,	Box in belts,	Complied.
National Lead Co.,	Lead pipe,	11	–	–	–	Good,	Cover set screws,	Complied.
BOSTON.								
M. J. Mahoney,	Book binding,	4	4	–	1	Fair,	Procure certificate,	Complied.
Cornhill Printing Co.,	Printing,	1	5	–	–	Fair,	Guard coupling,	Complied.
The Everett Press Co.,	Printing,	15	15	–	–	Fair,	Designate closets; post time table,	Complied.
Lachlan Wallace,	Paper ruling,	4	11	–	–	Fair,	Designate closets,	Complied.
The Sparrell Print,	Printing,	15	15	–	–	Fair,	Designate closets,	Complied.
A. C. Getchell,	Printing,	5	15	–	2	Fair,	Procure two certificates; designate closets.	Complied.
Frank M. Porter,	Printing,	6	4	–	1	Fair,	Post time table; designate closets,	Complied.

Digitized by Google

W. C. Demain & Son,	Blank books,	10	6	–	–	Fair,	Cover set screws; post time table,	Complied.
Conant & Newhall,	Printing,	11	–	–	1	Fair,	Procure certificate; post time table,	Complied.
J. A. O. Currier,	Printing,	5	–	–	–	Fair,	Post time table,	Complied.
Columbia Engraving Co,	Engraving,	9	19	–	–	Fair,	Designate closets,	Complied.
C. E. Twombly,	Printing,	2	2	–	–	Fair,	Post time table,	Complied.
C. M. & W. H. Hodson,	Printing,	3	2	–	1	Fair,	Procure one certificate; post time table.	Complied.
W. S. Best,	Printing,	26	4	–	–	Fair,	Designate closets; post time table,	Complied.
Standard Publishing Co,	Printing,	9	3	–	1	Fair,	Procure one certificate,	Complied.
T. R. Main & Son,	Printing,	8	–	–	1	Fair,	Procure certificate,	Complied.
J. L. McIntosh,	Numbering,	5	12	–	–	Fair,	Designate closets,	Complied.
J. Clark & Co.,	Printing,	9	1	–	–	Fair,	Post time table,	Complied.
M. F. Conner,	Paper ruler,	6	3	–	2	Good,	Procure certificate,	Complied.
Boston Adjustable Envelope Co.,	Envelopes,	5	7	–	–	Fair,	Guard coupling; post time table,	Complied.
M. Stulsky, Cohen & Pultzer,	Overalls,	10	20	–	–	Poor,	Designate closets; guard shafting; post time table.	Complied.
N. E. Newspaper Union,	Printing,	27	8	–	1	Poor,	Cover set screws; procure certificate,	Complied.
J. J. Davis,	Paper ruling,	3	2	–	1	Poor,	One school certificate; post time table.	Complied.
A. L. Winship & Co.,	Printing,	17	3	–	1	Poor,	Procure one certificate,	Complied.
Geo. H. Ellis,	Printing,	65	65	–	2	Good,	Procure two certificates; post time table.	Complied.
C. H. Simonds & Co.,	Printing,	40	25	–	–	Fair,	Guard main belt; post time table; designate closets.	Complied.
Boston Carpet Slipper Co.,	Slippers,	30	20	–	1	Fair,	Cover set screws; procure certificate.	Complied.
Jameson & Son,	Hats,	25	100	–	–	Fair,	Post time table,	Complied.
D. K. Phillips,	Power,	4	–	–	–	Good,	Cover set screws; guard stairway,	Complied.
E. Adams & Co.,	Book binding,	43	44	–	–	Good,	Cover set screws; have means of exit improved.	Complied.
Mills, Knight & Co.,	Printing,	41	48	–	2	Good,	Cover set screws,	Complied.

Digitized by Google

DISTRICT NO. 4 — *Continued.*

NAME OF FACTORY OR WORKSHOP.	Goods Manufactured.	Number Employed.				Sanitary Condition.	Orders Given.	Compliances.
		Males.	Females.	Under 14.	14 to 16.			
BOSTON — *Continued.*								
W. P. B. Weeks,	Power,	2	–	–	–	Fair,	Guard main belt; cover set screws,	Complied.
American Soda Fountain Co.,	Soda fountains,	363	5	–	–	Fair,	Ventilate closets; cover set screws; post time table,	Complied.
Norman & Bennett,	Shoes,	67	33	–	–	Poor,	Post time table; designate closets,	Complied.
Morrill, Dexter & Co.,	Drugs,	3	–	–	–	Good,	Cover set screws,	Complied.
Taber & Mayer,	Electric goods,	7	1	–	1	Fair,	Procure certificate; post time table,	Complied.
H. Hollander,	Clothing,	20	20	–	2	Fair,	Post time table,	Complied.
Library Bureau, Department A,	Printing,	9	24	–	–	Good,	Post time table,	Complied.
Library Bureau, Department C,	Printing,	17	1	–	2	Good,	Procure two certificates; post time table.	Complied.
J. J. McCarter,	Shoe binding,	7	10	–	–	Good,	Designate closets,	Complied.
Hawkes Mfg. Co.,	Brass goods,	13	2	–	–	Good,	Guard gears; designate closets; post time table.	Complied.
American Type Foundry Co.,	Types,	85	57	–	–	Good,	Cover set screws; post time table,	Complied.
Geo. H. Ellis (second inspection),	Printing,	65	65	–	2	Good,	Remove paper from under stairs,	Complied.
Suburban Light & Power Co,	Light and power,	6	–	–	–	Good,	Guard three belts,	Complied.
Raymond Syndicate Co.,	Mercantile,	10	35	–	–	Fair,	Ventilate basement,	Complied.
Rockwell & Churchill,	Printers,	87	33	–	–	Fair,	Guard coupling; post time tables,	Complied.
Sears Estate,	Power,	5	–	–	–	Fair,	Guard fly wheel; cover set screws,	Complied.
Boston Times Co.,	News,	5	5	–	–	Fair,	Post time table; designate closets,	Complied.
J. E. Carleton Co.,	Wire mattresses,	8	2	–	–	Fair,	Designate closets,	Complied.

Digitized by Google

Dana Eustis Estate,	Power,	3	–	–	–	Fair,	Guard fly wheel; guard shafting; cover set screws.	Complied.
Tileson Shoe Co.,	Shoes,	55	20	–	–	Fair,	Guard roller and skiver; also guard shafting	Complied.
Blodgett Bros. & Co,	Clocks,	14	–	–	1	Good,	Procure certificate; post time table,	Complied.
J. B. West & Co,	Buffing wheels,	3	22	–	–	Good,	Guard sticking shafting,	Complied.
Anchor Electric Co.,	Electric supplies,	50	12	–	–	Fair,	Post time table,	Complied.
Blanchard Machine Co.,	Machinery,	25	–	–	–	Good,	Guard belts,	Complied.
J. J Araklyer,	Printer,	15	5	–	–	Fair,	Designate closets,	Complied.
H. C. Whitcomb & Co.,	Electrotypers,	36	–	–	–	Fair,	Cover set screws; post time table,	Complied.
Chas D. Fish,	Printer,	20	5	–	1	Fair,	Procure certificate; post time table; designate closets.	Complied.
Geo. C. Scott & Son,	Electrotypers,	35	–	–	–	Fair,	Cover set screws; post time table,	Complied.
O. H. Lufkin,	Printer,	8	4	–	–	Fair,	Cover set screws; post time table; provide additional closet.	Complied.
Bailey Printing Co.,	Printers,	15	–	–	2	Fair,	Procure certificate; post time table; cover set screws.	Complied.
The Boston Gear Works,	Gears,	20	–	–	–	Good,	Cover set screws; post time table,	Complied.
E. Fleming & Co.,	Book binding,	50	65	–	–	Good,	Cover set screws,	Complied.
Macdonald & Son,	Book binding,	22	13	–	–	Good,	Cover set screws,	Complied.
Macdonald & Allen,	Book binding,	8	6	–	–	Fair,	Post time table,	Complied.
Union Heel Trimmer Co.,	Heel trimmers,	30	–	–	–	Fair,	Cover set screws,	Complied.
Avery L. Rand,	Printer,	20	30	–	–	Good,	Designate closet; post time table,	Complied.
C. A White & Co.,	Printing,	8	2	–	–	Fair,	Post time table,	Complied.
Nowland Mailing Co.,	Mailing,	–	20	–	–	Fair,	Post time table,	Complied.
Rand Avery Supply Co.,	Printing,	140	35	–	–	Fair,	Cover set screws; post time table,	Complied.
New England Bureau,	News,	3	12	–	–	Good,	Remove obstructions from stairway,	Complied.
F. W Dodge Co.,	News,	8	14	–	–	Good,	Improve means of exit,	Complied.
Brewer Estate,	Power,	2	–	–	–	Fair,	Cover set screws; guard gears,	Complied.
C. J. Peters & Son,	Electrotypers,	58	22	–	–	Good,	Cover set screws; post time table; designate closets.	Complied.

Digitized by Google

DISTRICT NO. 4 — *Continued.*

NAME OF FACTORY OR WORKSHOP.	Goods Manufactured.	Number Employed.				Sanitary Condition.	Orders Given.	Compliances.
		Males.	Females.	Under 14.	14 to 16.			
BOSTON — *Continued.*								
Boston Counter Co., . . .	Shoe counters, .	97	1	–	–	Good, .	Post time table, ...	Complied.
The Boston Engraving Co., .	Engraving, . .	55	–	–	–	Good, .	Guard couplings; cover set screws,	Complied.
Albert Levitt, ...	Machinery, . .	10	–	–	–	Good, .	Cover set screws, ...	Complied.
Dennett & Talbert, . . .	Power, . . .	4	–	–	–	Fair, .	Cover set screws; guard fly wheel; guard crank of engine.	Complied.
S. J. Parkhill & Co., . . .	Printing, . .	28	19	–	–	Good, .	Cover set screws; post time table; designate closets.	Complied.
Boston Book Binding Co., . .	Book binding, .	25	60	–	–	Good, .	Cover set screws; provide another closet for women.	Complied.
Lounesbury, Nichols & Worth, .	Printers, . .	18	5	–	–	Good, .	Cover set screws, ...	Complied.
Thos. J. M. Smith & Co., . .	Book binding, .	24	6	–	–	Fair, .	Clear up rubbish from floor; designate closets; post time table.	Complied.
C. A. F. Emery, ...	Printers, . .	9	3	–	–	Good, .	Designate closets; post time table, .	Complied.
L. J. McCloskey & Co., . .	Power, . . .	2	–	–	–	Good, .	Guard fly wheel; guard main belt; cover set screws.	Complied.
Bay State Electrotype Foundry Co.	Electrotyping, .	16	–	–	–	Fair, .	Guard coupling; box in belt; cover set screws.	Complied.
T. Y. Crowell & Co, ...	Book binding, .	75	100	–	–	Good, .	Cover set screws; post time table, .	Complied.
C. Callihan & Co, ...	Fire supply, .	5	2	–	–	Good, .	Designate closets; cover set screws,	Complied.
Am. Printing and Engraving Co.,	Printing and engraving.	27	8	–	–	Good, .	Designate closets, ...	Complied.
Robert Berlin, ...	Book binding, .	30	50	–	–	Good, .	Post time table, ...	Complied.

Digitized by Google

H. H. Cummins & Co.,	Machinery,	16	–	–	1	Fair,	Procure certificate; cover set screws; post time table.	Complied.
C. E. Kinnard,	Power,	2	–	–	–	Fair,	Box belts; cover set screws,	Complied.
Woodward Mfg. Co.,	Machinery,	7	–	–	–	Fair,	Cover set screws,	Complied.
Mills Estate,	Power,	3	–	–	–	Fair,	Cover set screws,	–*
National Sewing Machine Co.,	Machinery,	65	–	–	–	Fair,	Post time table; cover set screws,	Complied.
Coburn Stationery Co.,	Printing,	8	–	–	1	Fair,	Procure one school certificate; post time table.	Complied.
J. N. Allen & Berry,	Printing,	11	1	–	–	Fair,	Post time table,	Complied.
T. E. Reed,	Book binding,	13	12	–	–	Good,	Cover set screws,	Complied.
Geo. A. Hennberry,	Printing,	5	1	–	–	Good,	Post time table,	Complied.
T. J. Sullivan,	Paper ruling,	3	2	–	–	Fair,	Post time table,	Complied.
E. A. Jones,	Printing,	1	3	–	–	Good,	Post time table,	Complied.
Clinton Mfg. Co.,	Mackintoshes,	4	56	–	–	Fair,	Improve means of egress,	Complied.
Wm. Kahle,	Jewelry cases,	7	1	–	–	Good,	Post time table,	Complied.
Hersey, Damon & Sprague,	Shoes,	36	17	–	–	Fair,	Guard rolling machine,	Complied.
Chas. L. Ireson,	Belting,	7	3	–	–	Good,	Guard crank; post time table,	Complied.
W. M. Baker,	Chocolates,	30	100	–	11	Good,	Box in belt; post time table,	Complied.
Miss A. F. Grant,	Printing,	3	–	–	1	Fair,	Procure one school certificate; post time table.	Burnt out.
B. Gerber & Co.,	Ladies' suits,	12	6	–	–	Fair,	Guard stitching shafting,	Complied.
Alexander & Klopert,	Caps and gloves,	8	10	–	–	Fair,	Designate closets; post time table; guard shafting.	Moved.
M. Reinhardtz & Co.,	Clothing,	3	–	–	–	Good,	Post time table,	Complied.
Henry G. Hyde,	Power,	2	–	–	–	Fair,	Cover set screws,	Complied.
Russell, Snow & Davis Co.,	Clothing,	15	3	–	–	Fair,	Cover set screws; post time table; designate closets.	Complied.
Carl H Hentzelman,	Printing,	40	10	–	1	Good,	Procure one school certificate; post time table.	Complied.
H. M. Plympton & Co.,	Book binding,	17	18	–	–	Good,	Guard balance wheel and gears,	Complied.

* Recent order.

Digitized by Google

DISTRICT NO. 4 — *Continued.*

NAME OF FACTORY OR WORKSHOP.	Goods Manufactured.	Number Employed.				Sanitary Condition.	Orders Given.	Compliances.
		Males.	Females.	Under 14.	14 to 16.			
BOSTON — *Concluded.*								
Charles A. Brackett,	Paper boxes,	10	20	–	–	Good,	Cover set screws,	Complied.
L. Barta & Co.,	Printing,	47	14	–	–	Fair,	Guard motor,	Complied.
Orient Mfg. Co.,	Novelties,	10	10	–	–	Fair,	Designate closets; post time table,	Complied.
Margot Bros.,	Watch cases,	5	1	–	–	Good,	Post time table,	Complied.
R. S. Jones,	Book binding,	10	10	–	–	Good,	Post time table,	–
Wm Miller,	Novelties,	3	4	–	1	Good,	Procure one school certificate; post time table.	Complied.
S. Woodbery & Co.,	Printing,	4	1	–	–	Good,	Post time table,	Complied.
A. C. A. Linsbath & Co.,	Printing,	3	3	–	–	Good,	Post time table,	Complied.
C. E. Nye & Co.,	Printing,	5	1	–	–	Good,	Post time table,	Complied.
Broadway Mfg. Co.,	Overalls,	6	8	–	–	Fair,	Designate closets; post time table,	Complied.
A. W. Perry,	Power,	3	–	–	–	Poor,	Provide additional closet; designate closets.	Complied.
S. Benjamin,	Cloaks,	5	5	–	–	Good,	Post time table; designate closets,	Complied.
Mark W. Cross,	Harnesses,	27	3	–	–	Good,	Designate closets,	Complied.
J. F. Whalen & Co,	Printers,	7	9	–	–	Good,	Designate closets; post time table,	Complied.
The Credit Clearing Co,	Mercantile,	2	5	–	1	Fair,	Procure one school certificate,	Complied.
Thos. W. Ripley,	Printing,	28	10	–	–	Good,	Cover set screws; post time table.	Complied.
Samuel Usher,	Printing,	50	40	–	–	Good,	Designate closets; post time table,	Complied.
EAST BOSTON.								
N. E. Dyeing and Cleansing Co.,	Dyeing,	5	–	–	–	Poor,	Rail boiler pit; provide privy,	–*

Digitized by Google

Standard Oil Co.,	Cans,	13	–	–	1	Fair,	Provide school certificate; post time table.	Complied.
Manufacturers' Laundry Co.,	Laundry,	8	10	–	–	Good,	Designate closets; post time table,	Complied.
Boston and Lockport Block Co.,	Block,	33	–	–	–	Good,	Guard belts; post time table,	Complied.
C. A. Whooley & Co.,	Laundry,	2	15	–	–	Good,	Cover set screws,	Complied.
Wm. J. Miller,	Heaters,	4	–	–	–	Fair,	Post time table,	Complied.
Francisco De Masso,	Clothing,	36	14	–	1	Good,	Illiterate attend evening school; post time table.	Complied.
Cresene Jerime,	Macaroni,	6	–	–	–	Good,	Guard opening; cover coupling,	Complied.
West End Pants Co.,	Clothing,	10	17	–	–	Good,	Provide additional means of exit,	Complied.
East Boston Whiting Co.,	Whiting,	6	–	–	–	Fair,	Cover set screws,	Complied.
Mechanics Shirt Co.,	Shirts,	1	13	–	–	Good,	Guard belts; designate closets; post time table.	Complied.
Ainsworth Manson,	Mantels,	5	–	–	–	Fair,	Guard opening; remove shavings,	Complied.
N. E. Pottery Co,	Pottery,	49	6	–	1	Fair,	Illiterate minor go to school; cover set screws; 1 school certificate.	Complied.
East Boston Tow Boat Co.,	Repairs,	20	–	–	–	Fair,	Guard engine,	Complied.
Merriam Bros,	Toys,	6	–	–	–	Fair,	Guard opening,	Complied.
Batelsen & Petersen,	Engines,	50	–	–	–	Fair,	Cover set screws,	Complied.
Boston Stave and Cooperage Co.,	Casks,	68	–	–	–	Fair,	Cover set screws,	Complied.
N. E. Drug and Spice Mills,	Drugs,	6	–	–	–	Fair,	Procure 1 school certificate,	Complied.
Frame & McPherson,	House finish,	10	–	–	–	Fair,	Cover set screws,	Complied.
Bardwell & Anderson,	Tables,	50	–	–	1	Fair,	Procure 1 school certificate,	Complied.
E. Hodge & Co.,	Boilers,	65	–	–	–	Poor,	Empty privy vault; post time table,	Complied.
Davis & White,	Mantels,	9	–	–	–	Fair,	Cover set screws,	Complied.
Condor Iron Co.,	Iron castings,	60	–	–	–	Fair,	Cover set screws,	Complied.
Phonoharp Co.,	Phonoharps,	100	–	–	3	Fair,	Unlock outside doors,	Complied.
S. T. Manson & Co.,	Lumber mill,	25	–	–	–	Fair,	Cover set screws; provide means of exit.	Complied.

* Moved away.

Digitized by Google

DISTRICT NO. 4 — *Continued.*

NAME OF FACTORY OR WORKSHOP.	Goods Manufactured.	Number Employed.				Sanitary Condition.	Orders Given.	Compliances.
		Males.	Females.	Under 14.	14 to 16.			
EAST BOSTON — *Concluded.*								
Johnson, Olsen & Co.,	Office fixtures,	7	–	–	–	Fair,	Box in belts; cover set screws,	Complied.
Potter & Wrightington,	Canned goods,	18	31	–	2	Fair,	Designate closets; post time table,	Complied.
F. L. Holden,	Tin printing,	14	–	–	–	Fair,	Post time table,	Complied.
P. P. Walker,	Bottling,	1	3	–	–	Fair,	Post time table,	Complied.
Thos. Hoey,	Nipples,	35	–		–	Fair,	Guard gears; cover set screws,	Complied.
Lockwood Mfg. Co,	Machinery,	85	–	–	–	Fair,	Cover set screws,	Complied.
Geo. Hobbs Box Co.,	Kindlings,	7	–	–	–	Fair,	Guard belts; post time table,	Complied.
CHARLESTOWN.								
G. F. Caller,	Leather,	16	–	–	–	Poor,	Clean privy; cover set screws,	Complied.
R. C. Clifford & Co,	Furniture,	12	–	–	–	Good,	Post time table.	Complied.
Geo H. Wood & Co.,	Cement,	7	1	–	–	Fair,	Cover set screws; guard gears,	Complied.
Whittemore, Woodbery & Co.,	Wax,	5	2	–	–	Good,	Designate closets,	Complied.
India Extract Co,	Dye extracts,	4	–	–	–	Fair,	Guard opening,	Complied.
Palmer, Parker & Co,	Veneers,	30	–	–	–	Fair,	Guard coupling,	Complied.
Bunker Hill Laundry Co.,	Laundry,	10	31	–	–	Fair,	Post time table,	Complied.
A. DePrato & Co.,	Statuary,	10	–	–	–	Fair,	Illiterate minor to go to school,	Complied.
Powers & Co.,	Grist mill,	6	–	–	–	Fair,	Guard coupling,	Complied.
Carmochy & Co.,	Mantels,	5	–	–	–	Fair,	Box in belts,	Complied.
Osgood & Hart,	Iron castings,	70	–	–	–	Fair,	Guard rattler; repair water-closets,	Complied.
Orpin Bros.,	Desks,	60	–	–	–	Fair,	Illiterate to attend evening school,	Complied.
Charlestown Wood Co.,	Kindlings,	13	–	–	–	Poor,	Clean privy; guard belts,	Complied.

Digitized by Google

Furbursh & Co.,	Rendering,	14	–	–	–	Fair,	Post time table; cover set screws,	Complied.
Hoosac Tunnel Elevator,	Elevator,	14	–	–	–	Fair,	Guard gears; cover set screws,	Burnt.
Puritan Brewing Co.,	Beer,	15	–	–	–	Good,	Guard belts; box in belts; guard engine crank; guard fly wheel; cover set screws.	Complied.
P. Derby Co.,	Chairs,	40	–	–	–	Fair,	Guard opening; post time table,	Complied.
Davidson Rubber Co.,	Rubber goods,	65	70	–	1	Good,	Guard gears; procure certificate,	Complied.
Raymond Bicycle Co,	Roller skates,	25	10	–	–	Fair,	Illiterate to attend school; rail stairway; guard opening; provide counter balance to elevator.	Complied.
Nat'l. Biscuit Co.,	Crackers,	94	163	–	6	Good,	Cover set screws,	Complied.
Phila & Boston Face Brick Co.,	Faced brick,	50	–	–	–	Fair,	Guard gears; guard engine; rail stairway.	Complied.
Thomas Shoe Co.,	Shoes,	75	25	–	–	Fair,	Guard shafting; cover set screws; ventilate closets	Complied.
A. G. Van Nostrand,	Beer,	75	–	–	–	Fair,	Cover set screws,	Complied.
DeEste-Seeley Co.,	Brass work,	36	–	–	–	Good,	Guard fly wheel; repair exhaust fan,	Complied.
Howard Mfg. Co.,	Spool cotton,	25	134	–	3	Good,	Cover set screws,	Complied.
Geo. H. Richter,	Metal shelves,	20	–	–	–	Good,	Guard gears; guard coupling; cover set screws.	Complied.
E. S. Morse,	Kindlings,	14	–	–	–	Fair,	Cover set screws,	Complied.
Munroe & Connelly,	Overalls,	3	9	–	–	Fair,	Post time table,	Complied.
Geo. E. Fox & Co.,	Pies,	84	6	–	–	Good,	Designate closets; post time table; guard main belt; ventilate engine room.	Complied.
CHELSEA.								
Chelsea Gazette,	News,	3	3	–	–	Fair,	Designate closets,	Complied.
Boston Blacking Co.,	Cement,	10	1	–	–	Fair,	Post time table,	Complied.
Albion, Lord & Co.,	Rendering,	3	–	–	–	Fair,	Repair elevator,	Complied.
Fred. Theise,	Baskets,	30	–	–	–	Fair,	Post time table,	Complied.
Stickney, Terrell & Co.,	Whiting,	23	–	–	–	Fair,	Guard dynamo; guard coupling; cover set screws.	Complied.

Digitized by Google

DISTRICT No. 4 — *Concluded.*

NAME OF FACTORY OR WORKSHOP.	Goods Manufactured.	Number Employed.				Sanitary Condition.	Orders Given.	Compliances.
		Males.	Females.	Under 14.	14 to 16.			
CHELSEA — *Concluded.*								
Vulcan Mfg. Co.,	Iron bedsteads,	4	–	–	–	Good,	Illiterate to attend evening school,	Complied.
Samuel Cabot,	Lamp black,	28	–	–	–	Poor,	Repair privy; cover set screws,	Complied.
Sweett Car Wheel Co.,	Car wheels,	14	–	–	–	–	Clean and repair privy,	Complied.
B P. Nichols,	Printer,	3	2	–	–	Fair,	Box belt; post time table,	Complied.
Crawford Laundry Machine Co.,	Machinery,	4	–	–	–	Fair,	Guard buzz planer; report accident,	Complied.
Geo. A. Drysdale,	Iron bedsteads,	2	6	–	–	Fair,	Post time table,	Complied.
Anderson Bros,	Baskets,	5	1	–	–	Fair,	Post time table,	Complied.
Jacob Dryfus & Co.,	Shirts,	4	21	–	–	Poor,	Provide privy; post time table; clear stairway.	Complied.
L. K. Husted,	Laundry,	8	26	–	–	Poor,	Rail stairway,	Complied.
L. C. Chase & Co.,	Bicycle tires,	375	120	–	–	Fair,	Guard gears; post time table; remove ice from fire-escape.	Complied.
Forbes Lithographic Co,	Lithographs,	370	105	–	–	Good,	Guard belt; box in belts; keep outside doors open.	Complied.
Walker Bros.,	Dye extracts,	12	–	–	–	Fair,	Rail stairway,	Complied.
C. F. Kelly & Co.,	Shoes,	78	28	–	14	Fair,	Post time table; illiterate minor attend evening school.	Complied.
John L. Morgan & Co.,	Webbing,	2	10	–	1	Good,	Designate closets; guard main belt; post time table.	Complied.
Seaver & Co.,	Bone black,	15	–	–	–	Fair,	Box in belt; guard elevator,	Complied.
Magee Furnace Co.,	Furnaces,	250	–	–	–	Fair,	Cover set screw; guard gears; guard main belt.	Complied.

Digitized by Google

Holloway Mfg Co.,	Notions,	5	–	–	1	Good,	Cover set screws; post time table; guard gears; designate closets; guard opening.	Complied.
Bartell & Thehen,	Shoes,	7	13	–	–	Fair,	Post time table,	Complied.
Geo. D. Emery,	Mahogany,	68	–	–	–	Fair,	Box belts,	Complied.
Austin & Graves,	Crackers,	10	7	–	–	Fair,	Cover set screws; designate closets,	Complied.
Chelsea Clock Co.,	Clocks,	29	6	–	–	Good,	Designate closets,	Complied.
Thos. Strahan Paper Co.,	Paper,	41	1	–	6	Fair,	Procure four certificates,	Complied.
Wm. Martin & Son,	Webbing,	8	32	–	1	Good,	Procure certificate; cover set screws,	Complied.
L. & B. R.R. Co.,	Repairs,	20	–	–	–	Fair,	Report accidents,	Complied.
Thos. Martin & Bro. (Dept. B.),	Webbing,	13	72	–	2	Good,	Procure certificate,	Complied.
W. T. Cardy & Son,	Paper boxes,	6	30	–	2	Good,	Procure certificate,	Complied.
Jas. N. Stuart & Son,	Belt leather,	5	–	–	–	Good,	Guard milling machine; guard main belt; guard crank; guard fly wheel; cover set screws.	Complied.
Revere Rubber Co.,	Rubber goods,	420	30	–	3	Fair,	Cover set screws,	Complied.
Atwood & McManus,	Boxes,	47	–	–	–	Good,	Provide new rope to elevator,	–*
A. S. Rogers Shoe Co.,	Shoes,	126	159	–	16	Good,	Guard fly wheel; procure one school certificate.	Complied.
James Higgelbottom,	Laundry,	2	1	–	–	Fair,	Post time table,	Complied.
Revere.								
Libby Laundry Co.,	Laundry,	3	2	–	–	Good,	Designate closets; post time table,	Complied.
Revere Beach Laundry,	Laundry,	5	25	–	–	Good,	Guard wringers,	Complied.
Revere Drop Forge Co.,	Forging,	8	–	–	–	Poor,	Clean privy,	Complied.
Boston Fire Proofing Co.,	Fire brick,	51	–	–	–	Fair,	Cover set screws,	Complied.

* Recent order.

Digitized by Google

Report of Inspector Abbott.

Sir: — Enclosed please find tabulated report, as called for.

There is a monotony in the reports of inspectors as their work has become largely a regular routine, and even in the enforcement of new laws the methods are the same and business is done with the same people. The most arduous duties performed cannot appear in a brief report, and many things must be of a confidential nature.

Complaints have been few the past year, and from the following causes, not in factories: conductors and motormen working more than ten hours in twelve, and cars not properly heated. Factory complaints, working women and minors more than fifty-eight hours, and not complying with the weekly payment law. These matters have been corrected as soon as evidence could be procured in the several cases.

As I said in my last report, writers of anonymous letters should not find fault with the non-enforcement of the laws; if they have any facts, give the officer a chance to know just what they are. Some things an officer can find out, and some he has no means of so doing. Evidence of non-compliance with the weekly payment law must come from the employees; they only can have positive evidence. Persons make complaints who are ignorant of the law; they have read or heard one clause, and have not ascertained the various requirements necessary to make the statute effective.

The laws relating to the employment of children, the hours of labor for women and minors, and proper sanitary arrangements are generally well understood and fairly well complied with and little trouble has occurred from these causes. In every case where women have been working more than fifty-eight hours, it was found upon investigation that such was their own wish, as in many kinds of business the busy season is only from six to eight months, and the income for a year must be largely earned in that time. The failure to have time notices posted is caused generally by moving partitions, painting, etc., where the old ones have been, and the posting of new ones has been overlooked.

The most trouble met with in providing desirable sanitary conditions is in old and cheap buildings in cities, and a lack in towns of sufficient if any sewerage system. Where sanitary closets simply needed washing out, I have had it done while making my inspection; and when having time tables in my pocket have had them posted while at the factory, thereby knowing matters had been properly attended to and avoiding the necessity of send-

Digitized by Google

ing orders, and at a future time ascertaining if they had been complied with.

My relations with all those with whom I have had to do business have been most pleasant. Manufacturers have willingly complied with all suggestions made; but I think some depend too much upon the inspector, and neglect, until he comes, something that should have been attended to before. On the whole, considering the large number of factories and the great variety of business, it is surprising that complaints are so few and that all the laws are so well observed.

Summary.

Factories inspected,	453
Factories visited, found closed,	29
Supplementary inspections and investigations,	86
Buildings inspected,	91
Total inspections,	659
Elevators inspected,	196
Orders issued,	71
Poor egress reported to Mr. Dyson,	4
Number of children under fourteen years of age,	20
Number of children between fourteen and sixteen years of age,	1,661
Number of females over sixteen years of age,	17,231
Number of males over sixteen years of age,	33,048
Total number of employees,	51,960

Cities and Towns with Factories inspected therein.

Ashburnham,	7, — 1 closed.
Athol,	21, — 2 closed.
Auburn,	2, — 1 closed.
Brookfield,	6, — 1 closed.
Charlton,	3
Clinton,	9, — 2 closed.
Dana,	3
Dudley,	5
Douglas,	2
Fitchburg,	42, — 2 closed.
Gardner,	16, — 2 closed.
Grafton,	7
Hardwick,	3
Holden,	6
Hubbardston,	2
Lancaster,	2
Leicester,	13, — 2 closed.

Digitized by Google

Cities and Towns, etc. — Concluded.

Leominster,	32,	— 1 closed.
Millbury,	8,	— 1 closed.
Northborough,	5	
Northbridge,	5	
North Brookfield,	4	
Oxford,	8	
Shrewsbury,	1	
Southbridge,	9	
Spencer,	12,	— 1 closed.
Sturbridge,	3	
Sutton,	5,	— 1 closed.
Templeton,	9,	— 3 closed.
Uxbridge,	7	
Warren,	3,	— 4 closed.
Webster,	6	
Westborough,	10	
West Boylston,	7,	— 1 closed.
West Brookfield,	2	
Winchendon,	16	
Worcester,	152,	— 4 closed.
	453	29

Report of Buildings Inspected.

CLASS NO. 2, DISTRICT NO. 5. LEWIS F. F. ABBOTT, *Inspector.*

NAME OF BUILDING.	Orders Given.	Compliances.
Shrewsbury.		
King's hotel,	Ropes in four rooms,	Complied.
Worcester.		
Grey Furniture Co.,	Guard elevator well,	Complied.
Worcester & Suburban R.R.,	Comply with section 9, chapter 508,	Complied.
State Mutual building,	Adjust elevator cables,	Complied.
Worcester & Suburban R.R.,	Comply with heating requirements,	Complied.
Wald house,	Ropes in three rooms,	Complied.
Sherwood house,	Ropes in three rooms,	Complied.
Spencer & Leicester R.R.,	Comply with section 9, chapter 508,	Complied.
Sargent building,	Repair elevator gates,	Complied.
128 Chandler street,	Clear fire-escape,	Complied.
Webb Granite & Construction Co.,	Comply with section 8, chapter 481,	Complied.
W. C Young building,	Poor egress reported to Mr. Dyson,	-
Hotel Pleasant,	Repair elevator,	Complied.

Digitized by Google

DISTRICT No. 5, ... LEWIS F. F. ABBOTT, *Inspector*.

NAME OF FACTORY OR WORKSHOP.	Goods Manufactured.	Number Employed.				Sanitary Condition.	Orders Given.	Compliances.
		Males.	Females.	Under 14.	14 to 16.			
ATHOL.								
White & Raymond, . . .	Window sash, .	45	–	–	–	Good, .	Poor egress reported to Mr. Dyson,	–
AUBURN.								
Stoneville Worsted Co., . .	Worsted yarn, .	42	70	1	16	Good, .	Discharge girl under fourteen; post list of under sixteen.	Complied.
BROOKFIELD.								
Brookfield Paper Box Co., . .	Paper boxes, .	6	15	–	3	Poor, .	Provide water closet for females, .	Complied.
Otsego Mill, ...	Satinets, . .	45	30	–	–	Good, .	Poor egress reported to Mr. Dyson,	–
CLINTON.								
Lancaster Mills, ...	Ginghams, . .	950	850	–	93	Good, .	Post list of children under sixteen years.	Complied.
DUDLEY.								
Stevens Linen Works, . .	Crash, . . .	193	237	3	72	Good, .	Discharge all under fourteen; post list of all under sixteen.	Complied.
FITCHBURG.								
The Grant Yarn Mill, . .	Cotton yarn, .	55	145	5	27	Good, .	Discharge all under fourteen; post list under sixteen.	Complied.
Western Shirt Co., . . .	Shirts, . . .	–	22	–	–	Good, .	Post time table, ...	Complied.
Empire Laundry, . . .	Laundry, . .	4	3	–	–	Good, .	Post time table, ...	Complied.
The Orswell Mill, . . .	Cotton yarn, . .	65	200	2	54	Good, .	Discharge all under fourteen; post list under sixteen.	Complied.

Digitized by Google

DISTRICT NO. 5 — *Continued.*

NAME OF FACTORY OR WORKSHOP.	Goods Manufactured.	Number Employed.				Sanitary Condition.	Orders Given.	Compliances.
		Males.	Females.	Under 14.	14 to 16.			
GRAFTON.								
Saunders Cotton Mill,	Sheeting,	78	57	–	9	Good,	Provide new cable to elevator,	Complied.
HOLDEN.								
Jefferson Manufacturing Co.,	Woolens,	129	51	–	6	Good,	Post time table; procure school certificate.	Complied.
Dawson Manufacturing Co.,	Woolens,	48	20	–	2	Good,	Post time table,	Complied.
LEOMINSTER.								
W. D. Earl,	Horn goods,	70	10	–	–	Good,	Post time table,	Complied.
Whitney Carriage Co.,	Baby carriages,	175	25	–	–	Good,	Comply with 58-hour law,	Complied.
NORTHBOROUGH.								
Northborough Woolen Co.,	Woolens,	93	52	–	–	Good,	Post time table,	Complied.
OXFORD.								
Sigourney Mill,	Cotton warp,	19	16	–	3	Good,	Procure school certificate,	Complied.
SOUTHBRIDGE.								
Hamilton Woolen Co., No. 2,	Worsteds,	95	80	–	31	Good,	Comply with chapter 494 of 1898,	Complied.
Hamilton Woolen Co., No. 5,	Warps,	58	52	–	22	Good,	Comply with chapter 494 of 1898,	Complied.
American Optical Lens Works,	Lenses,	215	115	1	20	Good,	Discharge one under fourteen; post list under sixteen years.	Complied.

Digitized by Google

Spencer.								
Bacon & Sibley,	Shoes,	70	30	–	4	Good,	Repair elevator hatch,	Complied.
Dufton Bros.,	Satinets,	11	10	–	–	Good,	Post time table,	Complied.
William Barr & Son,	Heels,	6	34	–	3	Good,	Procure school certificate,	Complied.
Bebee, Webber & Co.,	Woolens,	80	30	–	–	Good,	Post 58-hour time,	Complied.
Sturbridge.								
Fiskdale Mills, No. 1,	Print cloth,	92	89	3	21	Good,	Discharge all under 14 by Sept. 1st; post list of all under 16.	Complied.
Fiskdale Mill, No. 2,	Print cloth,	72	75	5	23	Good,	Discharge all under 14 by Sept. 1st; post list of all under 16.	Complied.
Templeton.								
Bishop & Dickerson,	Reed chairs,	20	–	–	–	Good,	Provide new cable,	Complied.
Westborough.								
American Watch & Tool Co.,	Bicycle parts,	55	10	–	–	Good,	Post time tables,	Complied.
Humber & Co., Ltd.,	Bicycles,	300	3	–	1	Good,	Procure school certificate,	Complied.
Winchendon.								
M. E. Converse & Co.,	Chairs and toys,	68	17	–	–	Good,	Post time table; designate water-closet.	Complied.
N. E. Baby Carriage Co.,	Carriages,	17	2	–	–	Good,	Post time table; designate water-closet.	Complied.
Mason & Parker,	Bit braces and toys.	47	3	–	3	Good,	Provide new cable for elevator,	Complied.
Worcester.								
Worcester Carpet Co.,	Carpets,	213	137	–	46	Good,	Repair gate to elevator,	Complied.
J. J. Griffin,	Mattresses,	12	10	–	–	Good,	Post time tables,	Complied.
Worcester Counter Co.,	Counters,	105	5	–	10	Good,	Cover set screws on heads of moulders.	Complied.
S. C. Goddard & Son,	Shoes,	225	50	–	–	Poor,	Improved sanitaries,	Complied.
J. J. Warren Co.,	Leather specialties,	113	40	–	13	Fair,	Repair water-closet on third floor,	Complied.

Digitized by Google

DISTRICT NO. 5 — *Concluded.*

NAME OF FACTORY OR WORKSHOP.	Goods Manufactured.	Number Employed.				Sanitary Condition.	Orders Given.	Compliances.
		Males.	Females.	Under 14.	14 to 16.			
WORCESTER — *Concluded.*								
Goldberg Pants Co.,	Pants,	12	5	–	–	Good,	Post time table,	Complied.
Parisian Wrapper Co.,	Wrappers,	8	92	–	–	Good,	Post time table,	Complied.
K. Pobolensky,	White underwear,	4	10	–	–	Good,	Post time table,	Complied.
Mathews Mfg. Co.	Press work,	36	2	–	–	Good,	Post time table,	Complied.
Worcester Textile Co.,	Towels,	29	32	–	2	Poor,	Provide more water-closets; post time table.	Complied.
Whittall Plush Mill,	Plush carpets,	20	20	–	4	Good,	Post time table,	Complied.
Bay State Counter Co.,	Counters,	15	2	–	–	Good,	Post time table,	Complied.
Bigelow & Longley,	Tailors,	2	7	–	–	Good,	Post time table,	Complied.
Hammond Reed Co.,	Organ reeds,	60	40	–	2	Good,	Guard fly wheel and crank,	Complied.
Bay State Stamping Co.,	Press work,	22	8	–	–	Good,	Post time table,	Complied.
White Bros.,	Blacking,	7	3	–	–	Good,	Post time table,	Complied.
P. E. Somers,	Tacks,	20	2	–	2	Good,	Post time table; procure school certificate.	Complied.
A. H. Brunell,	Confectionery,	13	8	–	1	Good,	Post time table; procure school certificate.	Complied.
Ware, Pratt Co.,	Clothing,	10	50	–	–	Good,	Take up cable on elevator,	Complied.
Morse Laundry,	Laundry,	4	8	–	–	Good,	Post time table,	Complied.
Norton Emery Wheel Co.,	Emery wheels,	135	2	–	–	Good,	Post time table,	Complied.
The Baker-Ricketson Co.,	Wood work,	125	–	–	–	Good,	Comply with weekly payment law,	Complied.
The Torrey Razor Co.,	Razors and strops,	50	33	–	–	Good,	Remove obstruction from fire-escape,	Complied.
Curtis Mfg. Co.,	Woollens,	53	32	–	3	Good,	Comply with sect. 8, chap. 481,	Complied.

Digitized by Google

REPORT OF INSPECTOR TIERNEY.

SIR: — I send you to-day my tabulated report for the year 1898. I am able to add but little that is new to what was contained in my last year's report regarding the laws I am called on to enforce. The year just closing is one marked by the depressed condition of business in many manufacturing industries; therefore very many calls have been made by the inspectors when the factory was found shut down or running with reduced force.

The sanitary condition of the factories and workshops is a matter of great importance, for on this depends to a great extent the health, well-being and energy of the operatives. I am pleased to be able to report that during the past year much improvement has been made in this direction in very many of the old manufacturing establishments; but, while the most of them are in very good sanitary condition, there is still room for further improvement. Some are not kept in that condition of cleanliness which is conducive to health, and I have had occasion to issue several orders during the past year for better sanitary closets and ventilation, all of which have either been complied with or are in the process of construction.

A careful inspection has been made of nearly all the elevators in my district this year, and I have tested the safety devices on the elevator car of all of them. Most of them were found to be in good condition. Where they were not, orders have been given to remedy the defect, and they have been promptly complied with. Fortunately, this district has been free from serious accidents this year, caused by unsafe use of the same. I find that where proper safety devices and automatic guards are in use, and the hoisting machinery, ropes or cables are taken proper care of, accidents are reduced to a minimum. Where accidents do occur after the above precautions have been taken, in nearly all cases they can be attributed to the result of negligence or improper care on the part of the operative, as it is quite as necessary for the operative to use due care in operating all kinds of machinery as it is to have it well guarded. I think the tendency on the part of the operative has gradually improved in this direction since the enactment and enforcement of the inspection laws.

In relation to the guarding of the machinery, I have taken particular pains to have the set screws on the shafting protected, as they have been the cause of a great many accidents. Orders have been given to guard dangerous parts of machinery; and, as a general thing, belting, gearing and other portions of machinery requiring protection are well attended to.

Digitized by Google

The law relating to the employment of children between the ages of fourteen and sixteen has been satisfactorily complied with. There have been, however, a few cases found where they were at work without proper certificates on file; but in all such cases, when attention was called to the fact, certificates were obtained. The good results of this law are acknowledged by all who understand its intent and appreciate a fair education for all; and I am glad to say that all who employ such persons heartily co-operate with the inspector, thus making the work much easier and at the same time insuring better results.

In conclusion, permit me to say that uniform courtesy has been accorded the inspector by the manufacturers at all times, and a disposition has been manifested to assist him in his work.

I enclose herewith a summary of my work during the year, and, as you will observe, I have tabulated only those inspections where orders have been issued.

Number of Inspections made in Each City and Town.

Fall River,	270	Norton,	6
New Bedford,	165	Mansfield,	25
Taunton,	50	Freetown,	6
Attleborough,	85	Sandwich,	6
North Attleborough,	70	Orleans,	5
Attleborough Falls,	20	Provincetown,	5
South Attleborough,	6	Chartly,	10
Adamsdale,	2	Fairhaven,	10
North Dighton,	6	Westport,	6
Raynham,	3	Swansea,	3
South Easton,	7		
North Easton,	8		774

Summary.

Number of inspections made,	774
Number of orders issued,	360
Number of orders complied with,	356
Number of children between fourteen and sixteen,	4,000
Number of children between thirteen and fourteen,	9
Number of males employed,	35,000
Number of females employed,	28,000

Digitized by Google

DISTRICT No. 6, ... JOHN F. TIERNEY, *Inspector*.

NAME OF FACTORY OR WORKSHOP.	Goods Manufactured.	Number Employed.				Sanitary Condition.	Orders Given.	Compliances.
		Males.	Females.	Under 14.	14 to 16.			
ADAMSDALE.								
Adamsdale Mills, . . .	Cotton yarns, .	30	26	–	5	Good, .	Post time notice; cover up draft gears.	Complied.
FALL RIVER.								
King Philip Mills, . . .	Fancy goods and lawns.	517	540	–	55	Good, .	Repair elevator; keep outside doors unlocked; put automatic gates on elevator hatchways.	Complied.
La Independent Publishing Co.,	Newspaper, . .	16	2	–	–	Good, .	Post time notice, ...	Complied.
J. H. Franklin & Co., . . .	Job printing, .	8	2	–	1	Good, .	Post time notice; file school certificate.	Complied.
Small Bros., ...	Twine and bandings.	47	10	–	7	Good, .	Keep doors closed on hoistways, .	Complied.
Maple St. Laundry, . . .	Steam laundry, .	10	25	–	1	Good, .	File school certificate, . . .	Complied.
George Congdon, . . .	Scrims, . .	2	7	–	–	Good, .	Post time notice, ...	Complied.
Old Colony Brewing Co., . .	Ales and porters, .	44	–	–	–	Good, .	Gates on elevator opening, . .	Complied.
D. M. Anthoney, ...	Provisions, . .	37	2	–	–	Good, .	Repair safety device on elevator; repair gates on the same.	Complied.
George Cummings & Son, . .	Top roll covering,	7	2	–	–	Good, .	Post time notice, ...	Complied.
Power Top Roll Factory, . .	Top roll covering,	4	2	–	–	Good, .	Post time notice, ...	Complied.
Holding Rope and Banding Factory.	Rope banding, .	6	–	–	2	Good, .	Post time notice, ...	Complied.
Empire Laundry, . . .	Steam laundry, .	4	9	–	–	Good, .	Post time notice, ...	Complied.

Digitized by Google

DISTRICT NO. 6 — *Continued.*

NAME OF FACTORY OR WORKSHOP.	Goods Manufactured.	Number Employed.				Sanitary Condition.	Orders Given.	Compliances.
		Males.	Females.	Under 14.	14 to 16.			
FALL RIVER — *Continued.*								
Arkwright Mills,	Cotton goods to order.	166	133	3	15	Good,	File school certificate,	Complied.
J. H. Williams,	Loom harness,	8	2	–	–	Good,	Post time notice,	Complied.
Jesse Eddey Mfg. Co.,	Woollen cloth,	120	40	–	7	Good,	Cover up gears,	Complied.
Hargraves Mills, No. 1,	Cotton goods to order.	210	240	–	22	Good,	Clean and whitewash water-closets; box up weights on hatchways.	Complied.
Parker Mills,	Cotton goods to order	250	200	–	26	Good,	Guard belting,	Complied.
Fall River Iron Works Co.,	Print cloths,	1074	1292	–	115	Good,	Cover up draft gears; post time notice; file school certificates; repair safety device on elevator.	Complied.
Wampanoag Mills,	Print cloths and fine goods.	510	450	–	65	Good,	Designate water-closets; file school certificates; cover up draft gears.	Complied.
American Linen Co.,	Print cloths,	450	550	–	95	Good,	Cover up draft gears,	Complied.
Richard Borden Mfg. Co.,	Print cloths, worsted goods and fancies.	309	391	–	53	Good,	File school certificates; post time notice; repair self-closing hatches.	Complied.
Cornell Mills,	Print cloths and odd goods.	220	205	–	32	Good,	File school certificates; keep doors unlocked.	Complied.
J. H. Esties & Son.,	Cotton twines,	97	100	–	11	Good,	Put flooring under elevator drum; box up pulleys; file school certificates.	Complied.

Digitized by Google

Algonquin Printing Co., . .	Printing calicoes,	114	16	–	2	Good, .	Post time notice; box up pulleys, .	Complied.
Merchants Mfg. Co.. Mill No. 3,	Print cloths, . .	200	150	–	19	Good, .	Cover up draft gears, . . .	Complied.
Merchants Mfg. Co., Mills Nos. 1 and 2.	Print cloths, . .	300	600	–	23	Good, .	Cover up draft gears; clean and whitewash water-closets.	Complied.
Flint Mills, ...	Cotton goods to order.	275	256	–	78	Good, .	Put flooring under elevator drums; guard belt; clean and whitewash water-closets.	Complied.
American Printing Co., . .	Printing calicoes,	585	115	–	15	Bad, .	Put automatic gates on elevator; put in new water-closets; file school certificates.	Partly complied with.
Union Cotton Mfg. Co., . .	Print and wide goods.	467	492	–	50	Good, .	Cover up draft gears; clean and whitewash water-closets; repair elevator.	Complied.
The Kelley Shoe Co., . .	Men's shoes, .	53	10	–	9	Good, .	File school certificates, . . .	Complied.
Stevens Mfg. Co., . . .	Bed spreads, .	142	55	–	8	Good, .	Cover up draft gears, . . .	Complied.
Fall River Bleachery, . .	Bleaching cotton cloth.	233	47	–	13	Good, .	Box up pulleys; post time notice; put gates on opening of floor.	Complied.
Fall River Bobbin & Shuttle Co.,	Bobbins and shuttles.	133	1	–	5	Good, .	File school certificates; repair safety device on elevator.	Complied.
Pocasset Mfg. Co., . . .	Twills and sateens,	350	400	–	55	Good, .	File school certificates, . . .	Complied.
Slade Mills, ...	Print cloths, . .	275	300	–	32	Fair, .	Repair water-closets, . . .	Complied.
Pocasset Hat Factory, . .	Felt hats, . .	30	23	–	2	Good, .	Post time notice; file school certificates; designate water-closets; put railing on each side of main stairways.	Complied.
Fall River Laundry, . . .	Steam laundry, .	25	62	2	9	Good, .	Box up pulleys; guard wheel on engine; file school certificates.	Complied.
Durfee Mills, ...	Print cloths and odd goods.	540	567	–	90	Good, .	Cover up draft gears; put new water-closets in No. 3 mill.	Complied.
Chace Mills, ...	Print cloths, twills, and wide goods.	240	320	–	41	Good, .	Repair worm gears on elevator, .	Complied.

Digitized by Google

DISTRICT NO. 6 — *Continued.*

NAME OF FACTORY OR WORKSHOP.	Goods Manufactured.	Number Employed.				Sanitary Condition.	Orders Given.	Compliances.
		Males.	Females.	Under 14.	14 to 16.			
FALL RIVER — *Concluded.*								
Barnaby Mfg. Co.,	Fine colored goods,	221	250	–	22	Good	Cover up draft gears; put buttons on stripper doors on cards.	Complied.
Mechanics Mills,	Print cloths,	270	300	–	45	Good,	New gears on elevator drums; cover up gears; remove set screws.	Complied.
Weetamoe Mills,	Print and odd goods.	219	166	–	37	Good,	Guard belt; remove set screws; post time notice.	Complied.
Shove Mills,	Print cloths and odd goods.	360	300	–	35	Good,	Post time notice; file school certificate.	Complied.
Cobb, Bates & Yerxa,	Grocers,	25	5	–	–	Good,	New water-closets for women,	Complied.
Marshall's Hat Factory,	Men's felt hats,	200	300	–	16	Fair,	Box up pulleys; put fences in blower room; file school certificates.	Complied.
Troy C. & W. Mfg. Co,	Cotton goods to order.	207	208	–	21	Good,	Repair safety device on elevator and put flooring under drum of same.	Complied.
Granite Mills,	Cotton goods to order.	560	600	–	39	Good,	Post time notice; cover up gears; unlock outside doors; file school certificates.	Complied.
Canonicut Mills,	Wide and fine goods.	80	84	–	22	Good,	Cover up draft gears,	Complied.
Sanford Spinning Co,	Fine cotton yarns,	80	275	–	26	Good,	Box up mule heads; cover up draft gears.	Complied.
Davol Mills,	Sheeting and fancies.	200	250	–	25	Good,	Post time notice; cover up draft gears.	Complied.

Digitized by Google

Seaconnet Mills, . . .	Print cloths, . .	200	400	–	55	Good, .	New rope on elevator; cover up draft gears.	Complied.
Hargraves Mills Nos. 2 and 3, .	Fine cotton goods,	250	300	–	22	Good, .	Repair safety device on elevator; post time notice; cover up gears; put new rope on elevator	Complied.
Fall River Manufactory, . .	Cotton goods to order.	172	192	–	30	Good, .	Post time notice; cover up draft gears.	Complied.
Metacomet Mfg. Co., . . .	Print cloths, . .	135	200	–	18	Good, .	Cover up draft gears, . . .	Complied.
Barnard Mfg. Co., . . .	Specialties, . .	200	300	–	55	Good, .	File school certificates; cover up draft gears; repair safety device on elevator; keep outside doors unlocked.	Complied.
Kerr Thread Mills, . . .	Fine yarns and threads.	256	283	4	60	Good, .	Put stop motion on engine; file school certificates.	Complied.
Border City Mfg. Co., . .	Specialties, . .	535	600	–	75	Good, .	Cover up draft gears; clean and repair water-closets.	Complied.
Tecumseh Mills, . . .	Wide goods to order.	289	300	–	22	Good, .	Cover up draft gears; put railing in front of cranks on engines.	Complied.
Narragansett Mills, . . .	Colored jeans and sateens.	195	325	–	45	Good, .	New rope on elevator, . . .	Complied.
Osborn Mills, ...	Print and fine goods.	390	360	–	35	Good, .	Repair safety device on elevator; clean and whitewash water-closets.	Complied.
Laurel Lake Mills, . . .	Print cloths and wide goods.	310	250	–	35	Good, .	Clean and whitewash water-closets and repair the same.	Complied.
Quequechan Steam Laundry, .	Steam laundry, .	7	4	–	–	Good, .	Post time notice, ...	Complied.
Globe Yarn Mills, . . .	Fine cotton yarns,	400	600	–	95	Good, .	Repair safety device on elevator; guard doors on cards.	Complied.
Sagamore Mfg. Co., . . .	Print cloths, . .	350	450	–	35	Good, .	File school certificate; designate water-closets.	Complied.

Digitized by Google

DISTRICT NO. 6 — *Continued.*

NAME OF FACTORY OR WORKSHOP.	Goods Manufactured.	Number Employed.				Sanitary Condition.	Orders Given.	Compliances.
		Males.	Females.	Under 14.	14 to 16.			
SOMERSET.								
Somerset Enameled Brick Co.	Enameled brick,	40	–	–	4	Good,	Pay weekly,	Failed.
Mount Hope Iron Co.,	Nails,	150	–	–	1	Good,	Post time notice; file school certificate.	Complied.
FAIRHAVEN.								
Fairhaven Steam Laundry,	Steam laundry,	4	2	–	–	Good,	Post time notice.	Complied.
SOUTH DENNIS.								
O. B. Mfg. Co.,	Shirts and overalls,	2	25	–	–	Good,	Post time notice; box up pulleys,	Complied.
Red Star Mfg. Co.,	Coats and overalls,	8	28	–	–	Good,	Post time notice; box up pulleys,	Complied.
SANDWICH.								
A. V. Johnson & Co.,	Decorating glass ware.	5	8	–	–	Good,	Post time notice,	Complied.
ORLEANS.								
Cummings & Howes,	Men's clothing,	25	27	–	–	Good,	Box up shafting,	Complied.
ASSONET.								
Crystal Spring Bleaching and Dyeing Company.	Print calicoes,	65	5	–	4	Good,	Put new rope on elevator,	Complied.
PROVINCETOWN.								
Shaw Bros. & Co.,	Shirts and overalls,	2	50	–	–	Good,	Box up shafting,	Complied.

Digitized by Google

New Bedford.								
Hathaway Mfg. Corporation,	Fine cotton goods,	576	394	–	40	Good, .	Cover up gears; designate water-closets.	Complied.
Acushnet Mill Corporation, .	Fine cotton goods,	667	468	–	50	Good, .	Buttons on striper doors; cover up draft gears; put stop motion on engines	Complied.
Dartmouth Mfg. Co., . . .	Fine cotton goods,	278	231	1	25	Good, .	Cover up gears; file school certificates; designate water-closets	Complied.
Potomska Mills, ...	Fine cotton goods,	583	488	–	50	Good, .	Box up mule heads; file school certificates.	Complied.
City Mfg. Corporation, . .	Fine cotton yarns,	260	446	–	45	Good, .	File school certificates; put new rope on elevator.	Complied.
Coffin Brothers, ...	Paper boxes, .	3	17	–	7	Good, .	Guard shafting, ...	Complied.
Grinnell Mfg. Corporation, .	Fine cotton goods,	505	344	–	49	Good, .	Post time notice; designate water-closets; put new rope on elevator.	Complied.
Whitman Mills, ...	Fine cotton goods,	500	400	–	27	Good, .	File school certificates, . . .	Complied.
Pierce Mfg. Corporation, . .	Fine cotton goods,	215	300	–	29	Good, .	Cover up draft gears; file school certificates.	Complied.
D. A. Snell, ...	Fancy crackers, .	64	27	–	4	Good, .	File school certificates, . . .	Complied.
Howland Mills, ...	Fine cotton yarns,	326	314	–	32	Good, .	Cover up set screws; put stop motion on engines.	–*
Rotch Spinning Corporation, .	Fine cotton yarns,	241	69	–	19	Good, .	Cover up set screws; put stop motion on engines.	–*
T. M. Denham & Bros., . .	Men's white shirts,	13	77	–	8	Good, .	File school certificates, . . .	Complied.
Tabor Art Publishing Co., . .	Pictures, . .	240	150	–	17	Good, .	File school certificates, . . .	Complied.
J. C. Rhods & Co., . . .	Shoe eyelets, .	49	–	–	–	Good, .	Repair safety device, . . .	Complied.
National Cordage Co., . .	Hemp rope, . .	185	48	–	–	Good, .	Cover up gears, ...	Complied.
Morsse Twist Drill Co., . .	Twist drills, . .	334	35	–	–	Good, .	Post time notice, ...	Complied.
Williston H. Collins & Co., .	Bookbinding, .	7	3	–	1	Bad, .	Post time notice; file school certificate; put in new water-closets.	Complied.

* Partly complied with.

Digitized by Google

DISTRICT NO. 6 — *Continued.*

NAME OF FACTORY OR WORKSHOP.	Goods Manufactured.	Number Employed.				Sanitary Condition.	Orders Given.	Compliances.
		Males.	Females.	Under 14.	14 to 16.			
NEW BEDFORD — *Concluded.*								
Bristol Mfg. Co.,	Fine cotton goods,	295	300	–	44	Good,	Cover up gears,	Complied.
Wamsutta Mills,	Fine cotton goods and yarns,	1150	950	–	115	Fair,	Put in new water-closets,	Complied.
Pairpoint Mfg. Co.,	Silver and glass-ware.	345	64	–	10	Good,	Automatic gates on elevator openings.	Complied.
Beacon Mfg. Co,	Cotton yarns,	22	10	–	2	Good,	File school certificates,	Complied.
C. F. Wing,	Household goods,	39	9	–	–	Good,	Box up shafting; put flooring under elevator drums.	Complied.
New Bedford Spinning Co.,	Fine cotton yarns,	138	150	–	22	Good,	Connect wires to engine,	–*
ATTLEBOROUGH FALLS.								
Mason Jewelry Co.,	Jewelry,	16	17	–	7	Good,	Pay weekly; file school certificates,	Complied.
V. H. Blackinton & Co.,	Jewelry and novelties.	14	2	–	–	Good,	Post time notice,	Complied.
Gold Medal Braid Co.,	Dress braids,	10	39	–	5	Good,	File school certificates,	Complied.
The Mason Box Factory,	Paper boxes,	14	23	–	–	Good,	Put railing on side of stairways; guard shafting.	Complied.
John Anthonys,	Jewelry,	8	6	–	–	Good,	Post time notice,	Complied.
Mason, Howard & Co.,	Jewelry,	23	5	–	1	Good,	Post time notice; file school certificate.	Complied.

Digitized by Google

SOUTH ATTLEBOROUGH.								
Sadler Bros.,	Jewelry,	3	12	–	1	Good,	Post time notice; file school certificate.	Complied.
NORTH EASTON.								
Ames Shovel Works,	Steel shovels,	260	–	–	5	Good,	Box up gears,	Complied.
Hatch & Grinnell,	Men's and boys' shoes.	75	25	–	9	Good,	File school certificates,	Complied.
SOUTH EASTON.								
Heath & White,	Machinery,	2	5	–	–	Good,	Post time notice,	Complied.
CHARTLEY.								
W. H. Struday Mfg. Co.,	Jewelry,	43	17	–	3	Good,	File school certificates,	Complied.
NORTON.								
A. H. Sweets,	Paper and wood boxes.	57	23	–	1	Good,	Box up pulleys,	Complied.
TAUNTON.								
Reed & Barton,	Silverware,	380	50	–	6	Good,	File school certificates; automatic gates on elevators.	Complied.
Whittenton Mfg. Co.,	Colored cotton cloth.	594	567	–	55	Fair,	File school certificates; put automatic gates on elevator.	Complied.
Cannoe River Mills,	Cotton yarns,	25	72	–	18	Good,	Cover up draft gears,	Complied.
New Process Twist Drill Co.,	Forged twist drills,	25	2	–	2	Good,	Post time notice,	Complied.
Cohannet Mills, Nos. 1 and 2,	Fine cotton yarns,	186	143	–	25	Good,	Cover up draft gears; guard striper doors on cards; box up mule heads.	Complied.
Cohannet Mill, No. 3,	Fine cotton yarns,	152	112	–	18	Good,	Cover up draft gears; guard striper doors.	Complied.
Corr Mfg. Co.,	Plain and fancy cotton goods.	125	275	–	25	Good,	File school certificates; put railing in front of crank on engine.	Complied.

* Partly complied.

Digitized by Google

DISTRICT NO. 6 — *Continued.*

NAME OF FACTORY OR WORKSHOP.	Goods Manufactured.	Number Employed.				Sanitary Condition.	Orders Given.	Compliances.
		Males.	Females.	Under 14.	14 to 16.			
TAUNTON — *Concluded.*								
Elizabeth Pool Mills,	Cotton flannels,	56	139	–	13	Good,	File school certificates; remove set screws; repair safety device on elevator.	Complied.
Atlas Tack Co.,	Nails and tacks,	174	67	–	–	Good,	Put new safety device on elevator,	Complied.
Pool, Rotch & Co.,	Silverware,	24	6	–	–	Good,	Designate water-closets; guard wheel on engine.	Complied.
Taunton Pearl Works,	Pearl goods,	10	10	–	–	Good,	File school certificates; box up shafting; post time notice.	Complied.
Vigilant Button Works,	Jewelers' supplies,	9	10	–	–	Good,	Designate water-closets,	Complied.
Westvill Mills,	Cotton yarns,	48	32	–	5	Good,	Repair safety device on elevator,	Complied.
Oakland Mills,	Bed ticking,	60	70	–	9	Good,	File school certificates,	Complied.
Morton Bros.,	Steam laundry,	5	45	–	–	Good,	Designate water-closets,	Complied.
Taunton Street Railway,	Street railway,	72	3	–	–	Good,	Guard wheel on engines,	Complied.
The White Warner Co.,	Ranges,	63	1	–	–	Good,	Guard gears,	Complied.
Emery Book Binding,	Book binding,	5	17	–	–	Good,	Post time notice,	Complied.
New England Stove Co.,	Stoves and ranges,	37	1	–	–	Good,	Elevator condemned,	Complied.
Taunton Dye & Bleaching Co.,	Dyeing and bleaching.	32	–	–	–	Good,	Box up pulleys and gears; railing around wheel on engine; rail opening in floor.	Complied.
Brownell & Burt,	Carriages,	17	–	–	–	Good,	Railing around hatchway,	Complied.
Mason Machine Co.,	Cotton machinery,	456	2	–	2	Good,	Put safety device on elevator; box up gears; file school certificates; post time notice.	Complied.

Digitized by Google

NORTH DIGHTON.								
North Dighton Cotton Co.,	Cotton yarns,	34	35	4	9	Good,	File school certificates; repair safety device on elevator; post time notice.	Complied.
ATTLEBOROUGH.								
Attleborough Mfg Co.,	Novelties,	30	40	–	5	Good,	Post time notice; file school certificates; designate water-closets.	Complied.
Marble, Smith & Forrester,	Jewelry,	12	10	–	–	Good,	Post time notice; designate water-closets.	Complied.
W. H. Willmarth & Co.,	Jewelry,	66	48	–	4	Good,	Guard wheel on engine,	Complied.
Rignell, Bigney & Co.,	Jewelry,	54	66	–	–	Good,	Post time notice; file school certificates; designate water-closets	Complied.
Fontneau, Cummings & Fagan,	Jewelry,	12	12	–	1	Good,	Pay weekly; file school certificate,	Complied.
D F. Brigges & Co.,	Jewelry,	76	40	–	–	Good,	Cover up set screws,	Complied.
Watson, Newell & Co.,	Jewelry,	150	100	–	–	Good,	Designate water-closets,	Complied.
McReae & Keeler,	Jewelry,	43	42	–	8	Good,	Post time notice; file school certificates.	Complied.
R. F. Simmons & Co.,	Jewelry,	49	36	–	1	Good,	File school certificate,	Complied.
J. M. Fisher & Co.,	Jewelry,	30	15	–	1	Good,	File school certificate,	Complied.
Mossburg Wrench Co,	Novelties,	55	3	–	5	Good,	File school certificates,	Complied.
W. & S. Backington,	Jewelry,	100	60	–	2	Good,	File school certificates,	Complied.
Torney Jewelry Co.,	Jewelry,	40	30	–	–	Good,	Post time notice,	Complied.
J. C. Cummings,	Jewelry,	18	8	–	1	Good,	Post time notice,	Complied.
Attleborough Press,	Job printing,	12	2	–	–	Good,	Post time notice,	Complied.
Charles M. Robbins,	Jewelry,	55	110	–	13	Good,	Post time notice; file school certificates.	Complied.
A. S. Ingraham,	Electro plater,	13	2	–	3	Good,	Post time notice,	Complied.
Elleis, Livsey & Brown,	Jewelry,	22	22	–	–	Good,	Post time notice; pay weekly,	Complied.
Allen, Smith & Thurston,	Jewelry,	3	5	–	–	Good,	Post time notice,	Complied.
C. A. Wetherell & Co.,	Jewelry,	6	3	–	–	Good,	Post time notice; designate water-closets.	Complied.

Digitized by Google

DISTRICT NO. 6 — *Concluded.*

NAME OF FACTORY OR WORKSHOP.	Goods Manufactured.	Number Employed.				Sanitary Condition.	Orders Given.	Compliances.
		Males.	Females.	Under 14.	14 to 16.			
ATTLEBOROUGH — *Concluded.*								
W. D. Willmarth & Co.,	Coffin trimmings,	17	11	–	–	Good,	Pay weekly,	Complied.
King Mfg. Co.,	Jewelry,	10	2	–	–	Good,	Post time notice,	Complied.
L. R. Hall & Co.,	Jewelry,	4	2	–	–	Good,	Post time notice,	Complied.
H. M. Williams & Co.,	Seamless wire and tubing.	6	2	–	–	Good,	Post time notice; box up pulleys and gears.	Complied.
Fargo & Valentine,	Jewelry,	5	3	–	–	Good,	Post time notice,	Complied.
D. A. White & Co,	Jewelers' findings,	24	10	–	4	Good,	Box up gears; post time notice; file school certificates.	Complied.
W. F. Herring & Co.,	Jewelry,	11	7	–	2	Good,	Post time notice,	Complied.
Moore, Smith & Co.,	Jewelry,	5	12	–	–	Good,	Post time notice,	Complied.
James E. Blake & Co.,	Jewelry,	45	25	–	4	Good,	Post time notice; designate water-closets.	Complied.
O. W. Hawkins & Co.,	Jewelry,	4	4	–	–	Good,	Post time notice,	Complied.
Dodgevill Mills,	Print cloths,	150	150	–	19	Good,	Post time notice; file school certificates; box up mule heads; cover up draft gears.	Complied.
Hebron Mills,	Print cloths,	175	100	–	13	Good,	Box up mule heads; cover up draft gears.	Complied.
NORTH ATTLEBOROUGH.								
J. L. Crandall & Co.,	Jewelry,	27	5	–	3	Good,	Pay weekly; post time notice; designate water-closets.	Complied.
H. H. Bliss & Co.,	Jewelry,	17	23	–	–	Good,	File school certificates,	Complied.

Digitized by Google

T I. Smith & Co.,	Jewelry,	90	30	–	3	Good,	File school certificates,	Complied.
H. D. Merrett & Co.,	Jewelry,	40	30	–	–	Good,	Designate water-closets,	Complied.
Rilley, French & Hefferon,	Jewelry,	86	25	–	2	Good,	Post time notice; file school certificates.	Complied.
Thomas Totton & Co.,	Jewelry,	35	15	–	–	Good,	Designate water-closets; hang doors to open out.	Complied.
H. F. Barrowes & Co.,	Jewelry,	100	65	–	2	Good,	File school certificates,	Complied.
W. C. Clark & Co.,	Jewelry,	32	3	–	2	Good,	Post time notice; designate water-closets.	Complied.
F. M. Whiting & Co.,	Silverware,	58	2	–	–	Good,	Post time notice,	Complied.
D. R. Draper,	Steam laundry,	6	9	–	–	Good,	Post time notice,	Complied.
Globe Jewelry Co.,	Jewelry,	5	5	–	1	Good,	Post time notice; file school certificate.	Complied.
WESTPORT FACTORY.								
Westport Factory,	Cotton yarns,	81	83	–	18	Good,	Cover up gears,	Complied.

Digitized by Google

Report of Inspector Howes.

Sir: — I respectfully submit this my annual report for the year 1898. I began the work of this department as inspector five months ago, taking up the work of the late John L. Knight, a man who was an honor to the department. In coming into this district, I found it second to none, and the work that I have done has been very pleasant.

In regard to chapter 494, Acts of 1898, it is working well, and will have a tendency to employ older persons, and also show to some towns the necessity of maintaining evening schools. Before the above law was enacted, it was not known how much illiteracy there was in our manufacturing establishments. This has shown the school board the number of illiterates that are employed in their own towns.

In regard to all other laws that have been placed with this department, I do not know of any suggestions to make that would be any different from the reports that I have made in the past.

I will say, in conclusion, that all the suggestions that have been given to employers have been received and given the same consideration as orders.

I enclose herewith a summary of my work for the five months that I have been located in District No. 7. Number of inspections made in each city and town are as follows: —

Springfield,	51	Monson,	4
Holyoke,	60	Huntington,	1
Westfield,	9	South Hadley,	4
Northampton,	14	Ware,	5
Chicopee,	16	Ludlow,	7
Easthampton,	12	Williamsburg,	4
Palmer,	3	Westhampton,	3

Total number of factory inspections,		193
Total number of elevator inspections,		124
Number of orders issued,		148
Whole number of females employed,		10,234
Whole number of males employed,		12,498
Total number of males and females,		22,732
Children between fourteen and sixteen years of age: —		
Males,	440	
Females,	427	
Total number of children between fourteen and sixteen,		867

Digitized by Google

Number of Inspections in District No. 10, by Cities and Towns.

Pittsfield,	28	Lee,	1
North Adams,	17	Montague,	5
Adams,	7	Orange,	7
Ashfield,	2	Wendell,	3
Buckland,	4	Williamstown,	2
Conway,	3		
Colrain,	2	Whole number of inspections made,	91
Greenfield,	9		
Hawley,	1		

Number of elevators inspected,	87
Number of orders issued,	55
Number of compliances,	55
Total number of persons employed,	10,158
Total number of males employed,	5,638
Total number of females employed,	4,520
Total number fourteen to sixteen years old,	370

Digitized by Google

DISTRICT No. 7, ... JAMES R. HOWES, *Inspector*.

NAME OF FACTORY OR WORKSHOP.	Goods Manufactured.	Number Employed.				Sanitary Condition.	Orders Given	Compliances.
		Males.	Females.	Under 14.	14 to 16.			
CHICOPEE.								
Ames Sword Co., . . .	Swords and locks,	138	12	–	1	Good, .	Children's certificates, . . .	Complied.
Hampden Brewing Co, . .	Malt liquors, .	23	–	–	–	Good, .	Guard fly wheel, ...	Complied.
Springfield Provision Co., . .	Provision house, .	210	6	–	2	Good, .	Children's certificates, . . .	Complied.
J. Stevens Arms Co., . . .	Firearms, . .	112	5	–	3	Good, .	Guard belts, ...	Complied.
EASTHAMPTON.								
George S. Colton, . . .	Elastic goods, .	27	62	–	4	Good, .	Children's certificates; guard engine.	Complied.
Easthampton Elastic Web Co., .	Elastic webbing, .	21	9	–	2	Good, .	Post legal notices, ...	Complied.
Easthampton News, . . .	Job printing, .	6	3	–	–	Good, .	Post legal notices, ...	Complied.
Glendale Elastic Fabric Co.,	Elastic goods, .	159	166	–	18	Good, .	Designate closets; guard shafting; post legal notices.	Complied.
Nashawanuck Mfg. Co, . .	Elastic goods, .	170	110	–	5	Good, .	Guard set screws, ...	Complied.
Williston & Knight Co., No. 1, .	Buttons, . .	15	45	–	–	Good, .	Post legal notices; guard set screws,	Complied.
Williston & Knight Co., No. 2, .	Buttons, . .	48	40	–	5	Good, .	Children's certificates, . . .	Complied.
Brown Wagon Mfg, Co., . .	Wagons, . .	12	–	–	–	Good, .	Post legal notices, ...	Complied.
HOLYOKE.								
American Pad & Paper Co., .	Block paper, .	29	30	–	1	Fair, .	Keep closets clean, ...	Complied.
Beebe & Holbrook Co, . .	Paper, . . .	105	76	–	3	Good, .	Designate closets; post time notices.	Complied.

Digitized by Google

Beebe & Webber Co., No. 1,	Woollen goods,	107	28	–	4	Good,	Post time notices; children's certificates.	Complied.
J. E. Brown Mfg. Co.,	Bed quilts,	16	32	–	–	Fair,	Guard shafting and fly wheel; sanitary conditions.	Complied.
Crocker Mfg. Co.,	Paper,	127	34	–	–	Good,	Guard gears,	Complied.
Chemical Paper Co.,	Paper,	176	9	–	3	Good,	Guard gears and shafting; children's certificates.	Complied.
Coburn Trolley Track Co.,	Trolley tracks,	37	–	–	2	Good,	Guard shafting,	Complied.
Farr Alpaca Co, No. 1,	Coat linings,	316	423	–	33	Good,	Post legal notices,	Complied.
Farr Alpaca Co., No. 2,	Coat linings,	108	33	–	3	Good,	Guard drums,	Complied.
Griffith, Axtell & Cady Co.,	Printing,	36	10	–	5	Good,	Guard set screws; children's certificates.	Complied.
Germania Mills,	Woollen goods,	228	58	–	19	Good,	Guard gears and shafting,	Complied.
George C. Gill Paper Co.,	Paper,	160	100	–	1	Good,	Guard gears, belts and drums,	Complied.
Goddard Machine Co.,	Machinists,	23	–	–	–	Fair,	Sanitary conditions,	Complied.
Holyoke Warp Co.,	Warp,	49	36	–	8	Good,	Guard shafting; post time notices,	Complied.
Holyoke Lead Pipe Co.,	Lead pipe,	9	–	–	–	Good,	Guard belts and drums,	Complied.
Holyoke Paper Co.,	Paper,	88	137	–	2	Good,	Guard gears,	Complied.
Hampden Glazed Paper & Card Co.	Glazed paper,	73	22	–	1	Good,	Children's certificates,	Complied.
Linden Paper Co.,	Paper,	114	85	–	–	Good,	Guard gears,	Complied.
Massasoit Paper Co.,	Paper,	60	93	–	–	Good,	Post time notices,	Complied.
Massachusetts Screw Co.,	Screws,	44	6	–	10	Good,	Designate closets; guard shafting; post time notices.	Complied.
Merrick Thread Co., No. 1,	Cotton thread,	240	497	–	–	Good,	Additional guards; guard automatic covers with automatic rails.	Complied.
Merrick Thread Co., No. 3,	Cotton thread,	82	209	–	19	Good,	Post time notices,	Complied.
Nonotuck Paper Co.,	Paper,	240	99	–	3	Good,	Guard gears; post time notices,	Complied.
National Blank Book Co.,	Blank books,	150	89	–	11	Good,	Children's certificates,	Complied.
Norman Paper Co.,	Paper,	79	32	–	1	Good,	Guard gears and fly wheel; post time notices.	Complied.

Digitized by Google

DISTRICT NO. 7 — *Continued.*

NAME OF FACTORY OR WORKSHOP.	Goods Manufactured.	Number Employed.				Sanitary Condition.	Orders Given.	Compliances.
		Males.	Females.	Under 14.	14 to 16.			
HOLYOKE — *Concluded.*								
J. T. F. McDonald,	Ruling paper and pads.	4	10	–	2	Good,	Children's certificates,	Complied.
Parsons Paper Co., No. 2,	Paper,	55	125	–	–	Good,	Post legal notices,	Complied.
Riverside Paper Co., No. 1,	Paper,	65	72	–	–	Good,	Post legal notices; guard fly wheel,	Complied.
Seymour Cutlery Co.,	Cutlery,	67	–	–	5	Good,	Children's certificates; guard shafting; post time notices.	Complied.
Springfield Blanket Co.,	Horse blankets,	150	128	–	6	Good,	Post legal notices; children's certificates.	Complied.
Wm Skinner Mfg. Co.,	Silk goods,	290	390	–	34	Good,	Children's certificates,	Complied.
Taylor Mfg. Co.,	Paper boxes,	28	12	–	5	Good,	Children's certificates,	Complied.
Valley Paper Co.,	Paper,	60	89	–	–	Good,	Designate closets,	Complied.
Wauregan Paper Co.,	Paper,	46	18	–	–	Good,	Guard gears,	Complied.
Whiting Paper Co., No. 1,	Paper,	55	130	–	–	Good,	Guard shafting; post time notices,	Complied.
HUNTINGTON.								
Chester Paper Co.,	Paper,	32	42	–	1	Good,	Post time notices; children's certificates.	Complied.
LUDLOW.								
Ludlow Mfg. Co., upper mill,	Corded goods,	50	250	–	30	Poor,	Guard set screws; new closets,	Complied.

Digitized by Google

MONSON.								
D. W. Ellis & Sons,	Woollen goods,	50	25	–	3	Good,	Guard belts and fly wheel; post legal notices.	Complied.
NORTHAMPTON.								
Belding Brothers,	Silk goods,	145	320	–	7	Good,	Increase height of elevator gates; post time notices; guard shafting.	Complied.
Northampton Paper Box Co.,	Paper boxes,	25	44	–	–	Good,	Guard fly wheel; post legal notices,	Complied.
Nonotuck Silk Co,	Silk goods,	93	201	–	6	Good,	Guard fly wheel; Designate closets,	Complied.
Norwood Engineering Co.,	Machinists,	57	–	–	–	Good,	Guard fly wheels,	Complied.
Loudville Paper Co.,	Paper,	7	–	–	–	Good,	Guard shafting,	Complied.
PALMER.								
Holden and Fuller,	Silk and wool,	25	10	–	1	Good,	Provide specifications for weave room; children's certificates.	Complied.
Thorndike Co., Nos. 1 and 2,	Cotton ticking,	265	340	–	19	Good,	Guard fly wheel; post legal notices,	Complied.
SPRINGFIELD.								
Barney & Berry Skate Co.,	Skates,	70	–	–	1	Good,	Post legal notices,	Complied.
Henry H. Brown,	Bicycle bags,	3	–	–	–	Good,	Guard shafting; post legal notices,	Complied.
Milton Bradley & Co.,	Lithograph papers and toys,	100	23	–	3	Good,	Guard set screws; post legal notices,	Complied.
Cheny, Bigelow Wire Works,	Dandy rolls,	72	14	–	3	Good,	Guard set screws; post legal notices.	Complied.
Davis Electrical Works,	Incandescent lamps.	9	45	–	1	Good,	Designate closets; post legal notices,	Complied.
J. W. Herald Dental Co.,	Dentists' tools,	2	–	–	–	Good,	Post notices,	Complied.
Holyoke Glazed Paper & Card Co.	Glazed paper,	91	24	–	–	Good,	Guard shafting; children's certificates.	Complied.
Hutchins Narrow Fabric Co.,	Cotton tape,	15	50	–	1	Good,	Children's certificates,	Complied.
P. P. Kellogg & Co.,	Envelopes,	36	74	–	4	Good,	Children's certificates; post legal notices.	Complied.

Digitized by Google

DISTRICT NO. 7 — *Concluded.*

NAME OF FACTORY OR WORKSHOP.	Goods Manufactured.	Number Employed.				Sanitary Condition.	Orders Given.	Compliances.
		Males.	Females.	Under 14.	14 to 16.			
SPRINGFIELD — *Concluded.*								
New England Card & Paper Co.,	Glazed paper,	15	7	–	–	Good,	Post legal notices; guard drums,	Complied.
Phelps Publishing Co.,	Publishing,	91	26	–	–	Good,	Post legal notices,	Complied.
Springfield Printing & Binding Co.	Book binding,	52	38	–	–	Good,	Children's certificates,	Complied.
Springfield Envelope Co.,	Envelopes,	40	66	–	2	Good,	Guard belts,	Complied.
Springfield Drop Forging Co.,	Machinists,	83	2	–	1	Good,	Guard gears; post time notices,	Complied.
Springfield Level & Tool Co.,	Levels,	4	–	–	–	Good,	Post legal notices,	Complied.
Springfield Machine Screw Co.,	Screws,	12	–	–	2	Good,	Post legal notices,	Complied.
Indian Orchard Co.,	Cotton goods,	58	78	–	5	Good,	Post legal notices,	Complied.
Springfield Brush Works,	Hair brushes,	3	2	–	1	Good,	Children's certificates,	Complied.
Springfield Cornice Co.,	Sheet steel goods,	30	–	–	–	Good,	Guard shafting,	Complied.
A. N. Mayo & Co.,	Cotton waste,	10	32	–	–	Good,	Post legal notices,	Complied.
SOUTH HADLEY.								
Carew Mfg. Co.,	Paper,	57	76	–	2	Good,	Children's certificates; guard gears, set screws and shafting	Complied.
WESTFIELD.								
American Whip Co.,	Whips,	135	42	–	7	Fair,	Keep closets clean; guard set screws.	Complied.
Pomeroy & Van Duzen,	Whips,	52	21	–	–	Fair,	Children's certificates; keep closets clean.	Complied.
Sanford Whip Co,	Whips,	14	2	–	1	Good,	Post legal notices,	Complied.

Digitized by Google

Textile Mfg. Co.,	Casket hardware,	38	9	–	–	Good,	Guard set screws,	Complied.
Westfield Mfg. Co.,	Spool cotton,	8	10	–	1	Good,	Post legal notices; children's certificates; guard fly wheel.	Complied.
WILLIAMSBURG.								
G. W. Bradford, upper mill,	Whip butts,	8	–	–	–	Good,	Guard shafting and fly wheel,	Complied.
G. W. Bradford, lower mill,	Lumber,	4	–	–	–	Good,	Guard belt on drums,	Complied.
G. C. Cook,	Woollen blankets,	8	2	–	–	Good,	Post time notices,	Complied.
WESTHAMPTON.								
Charles N. Loud,	Packing boards,	8	–	–	–	Good,	Guard belts,	Complied.
WARE.								
The Otis Co.,	Underwear,	126	266	–	41	Good,	Guard shafting,	Complied.

Digitized by Google

DISTRICT No. 10, ... JAMES R. HOWES, *Inspector*.

NAME OF FACTORY OR WORKSHOP.	Goods Manufactured.	Number Employed.				Sanitary Condition.	Orders Given.	Compliances.
		Males.	Females.	Under 14.	14 to 16.			
GREENFIELD.								
Nichols Bros., ...	Butchers' cutlery,	39	4	–	2	Good, .	Children's certificates, . . .	Complied.
E. F. Reece & Co., . . .	Light hardware, .	9	–	–	–	Good, .	Keep outside doors unlocked, . .	Complied.
ORANGE.								
Orange Furniture Co., . .	Furniture, . .	35	–	–	2	Good, .	Children's certificates; post time notices.	Complied.
S. D. Munro Co., . . .	Woodworking shop.	8	–	–	–	Good, .	Guard engine, ...	Complied.
J. B. Reynolds, ...	Shoes, . . .	210	40	–	2	Good, .	Children's certificates, . . .	Complied.
MONTAGUE.								
Keith Paper Co., . . .	Paper, . . .	58	107	–	–	Good, .	Guard shafting and belts, . .	Complied.
CONWAY.								
DeWolf & Hassell, . . .	Shoes, . . .	13	9	–	4	Good, .	Children's certificates, . . .	Complied.
Tucker & Cook Mfg. Co., . .	Cotton cord, . .	2	10	–	–	Good, .	Keep inside doors unlocked; post time notice.	Complied.
NORTH ADAMS.								
N. L. Millard & Co., . . .	Shoes, . . .	267	191	–	16	Good, .	Children's certificates, . . .	Complied.
Eagle Mill, ...	Cotton cloth, .	92	43	–	14	Good, .	Designate closets, ...	Complied.
Potter Bros., ...	Flour and feed, .	4	1	–	–	Good, .	Guard belt, ...	Complied.
W. G. Cody & Co., Holden St., .	Shoes, . . .	140	60	–	11	Good, .	Provide Children's certificates, .	Complied.

Digitized by Google

Adams.								
Berkshire Cotton Co., No. 2,	Cotton cloth,	149	273	–	17	Good,	Keep closets in repair,	Complied.
L. L. Brown Paper Co., Main Mill.	Paper,	56	93	–	9	Good,	Post time notice; guard engine,	Complied.
Berkshire Cotton Co., No. 3,	Cotton cloth,	520	323	–	90	Good,	Guard fly wheel on engine,	Complied.
Lee.								
Hulburt Paper Co.,	Paper,	68	113	–	–	Good,	Guard shafting,	Complied.
Williamstown.								
W. H. Mason,	Lumber,	6	–	–	–	Good,	Guard drums,	Complied.
Pittsfield.								
Wilson & Horton, Upper Mill,	Woollen cloth,	240	97	–	12	Fair,	Keep closets clean,	Complied.
Wilson & Horton, Bel Air Mill,	Woollen cloth,	60	68	–	7	Good,	Guard Shafting; provide children's certificates.	Complied.
O. W. Robbins Shoe Co.,	Shoes,	195	75	–	7	Good,	Provide children's certificates; post time notices.	Complied.
W. E. Tilotson,	Woollen cloth,	250	150	–	34	Good,	Provide communication from work-rooms to engine room.	Complied.
J. L. & T. D. Peck Mfg. Co.,	Dress goods,	69	37	–	9	Fair,	Keep closets clean,	Complied.
Sisson & Robinson,	Paper boxes,	10	31	–	3	Good,	Children's certificates,	Complied.
D. M. Collins & Co.,	Gents' underwear,	16	174	–	–	Good,	Communication from rooms to engineer's room.	Complied.
Berkshire Mfg. Co.,	Gents' pants,	20	37	–	2	Good,	Children's certificates; post time notice.	Complied.
Wilson & Horton, Bel Air Mill,	Woollen cloth,	87	58	–	7	Good,	Guard gears,	Complied.
K. & W Co.,	Incandescent lamps.	11	9	–	2	Good,	Post time notices; designate closets; guard belts.	Complied.
A. H. Rice & Co.,	Silk goods,	38	124	–	30	Good,	Post time notice,	Complied.

Digitized by Google

DISTRICT NO. 10 — *Concluded.*

NAME OF FACTORY OR WORKSHOP.	Goods Manufactured.	Number Employed.				Sanitary Condition.	Orders Given.	Compliances.
		Males.	Females.	Under 14.	14 to 16.			
PITTSFIELD — *Concluded.*								
Wilson & Horton, Lower Mill, .	Woollen cloth, .	60	–	–	–	Good, .	Keep doors unlocked from inside in night work.	Complied.
Pontoosuc Woollen Co., . .	Woollen cloth, .	126	208	–	17	Fair, .	Children's certificates; guard gears; keep closets clean.	Complied.
W. E. Tilotson, Morning Side Mill.	Woollen cloth, .	193	180	–	26	Good, .	Guard main driving drums and belts,	Complied.
RICHMOND.								
Wm. L. Nichols, ...	Lumber, . .	4	–	–	–	Good, .	Guard belts and fly wheel, . .	Complied.

Digitized by Google

Report of Inspector Putnam.

Sir: — I herewith transmit to you a condensed report of my work as the inspector of factories in District No. 8 for the year. By comparison with my last report, it will be readily seen that the laws which are placed in the hands of the factory inspector to enforce are being better and better observed. Last year I found it necessary to issue 505 orders; this year, but 387 have been issued.

But few accidents have been reported. Those of importance (one fatal) upon investigation I have found to have occurred mainly through the carelessness of the injured party. Cases of locked doors are infrequent, and whenever found have been remedied at once on receipt of the order. Dangerous machinery, crank shafts and fly wheels are generally well guarded, but "eternal vigilance" on the part of the inspector is the price of safety. It sometimes causes the inventive faculties of the inspector to work overtime to know just how to guard dangerous machinery so as not to hamper the operator or impair the working of the machine, which may be a new invention or it may be an old invention. Three machines occur to me of the latter class. One is the heavy cordage machinery, which apparently is very dangerous, but so far as I know there is no way of guarding it. Grinders in rubber works, upon which accidents are rare, but they do happen, and for which a suitable and practical guard is yet to be invented. The sole moulder in use in shoe factories offers a fertile field for the inventor, as this machine has the reputation of maiming every man who operates it for any length of time. Every manufacturer of machinery which is run by power should consider and perfect the ways and means of guarding the dangerous parts of the machines, as he considers and perfects the working of them.

The law relating to the employment of minors, chapter 494, Acts of 1898, I cannot speak of at length, as it only went into effect on the first day of September; but, as far as I have been in regard to it, the manufacturers express themselves as highly pleased.

Elevators have been found in fair condition, although it has been necessary to order new cables in a number of instances. The custom of anybody and everybody in the factory running the elevator, with no way of signalling from floor to floor, is a reprehensible one, and is the cause of many accidents.

Some attempts have been made to exhibit children under fifteen

Digitized by Google

years of age in riding and acrobatic feats; but upon notifying the management the law was cheerfully complied with.

My relations with employers and employees continue to be pleasant, and all courtesy is extended to me upon my visits to the factories and all places where my duty calls me.

Summary.

TOWN OR CITY.	Number of Inspections.	Number Employed.		Number of Children Employed		Number of Orders Issued.
		Males.	Females.	Under 14.	14 to 16.	
Abington,	11	976	357	-	4	14
Avon,	2	135	3	-	4	1
Braintree,	11	456	105	-	2	5
Bridgewater,	8	578	111	-	1	23
East Bridgewater,	2	197	3	-	-	6
Brockton,	135	8,520	2,817	1	82	164
Canton,	2	85	69	-	-	1
Dedham,	2	337	199	-	10	4
Foxborough,	7	248	302	-	-	5
Halifax,	1	15	-	-	-	1
Hanover,	3	88	7	-	-	2
Holbrook,	3	58	16	-	1	5
Hull,	1	6	-	-	-	1
Hyde Park,	22	1,287	728	-	27	18
Kingston,	2	82	3	-	-	1
Medfield,	4	222	294	-	-	-
Middleborough,	11	751	219	-	10	24
Norfolk,	3	130	12	-	2	3
Norwood,	10	816	204	-	2	3
Plymouth,	9	1,072	227	-	59	5
Quincy,	13	464	425	-	5	13
Randolph,	8	574	153	-	5	17
Rockland,	14	838	197	-	4	9
Stoughton,	10	401	183	-	11	6
Walpole,	7	435	55	-	7	9
Weymouth,	19	1,406	493	-	13	27
Whitman,	14	1,610	525	-	20	21
Totals,	334	21,887	7,707	1	269	387

Number of elevators inspected, ... 140

Number of visits made, exclusive of inspections, ... 265

Digitized by Google

DISTRICT No. 8, ... EDWARD B. PUTNAM, *Inspector*.

NAME OF FACTORY OR WORKSHOP.	Goods Manufactured.	Number Employed.				Sanitary Condition.	Orders Given.	Compliances.
		Males.	Females.	Under 14.	14 to 16.			
ABINGTON.								
King Bros.,	Boots and shoes,	30	10	–	–	Fair,	Guard roller and skiver,	Complied.
Lewis A. Crossett,	Boots and shoes,	225	60	–	–	Good,	Guard set screws; rail leveller,	Complied.
M. N. Arnold & Co.,	Boots and shoes,	550	250	–	3	Fair,	Control power on sewing machine shafts; guard set screws, rail crank shaft and fly wheel.	Complied.
W. S. O'Brien,	Pasted stock,	48	12	–	1	Fair,	Guard splitter; box or rail belt and pulley.	Complied.
Plymouth Rock Candy Co.,	Confectionery,	2	1	–	–	Fair,	Post time tables,	Complied.
T. F. Giles,	Quilted soles,	3	–	–	–	Fair,	Box belt,	Complied.
Lilliputian Shoe Co.,	Infants' shoes,	3	4	–	–	Good,	Guard set screws; post time table,	Complied.
AVON.								
L. G. Littlefield,	Boots and shoes,	120	30	–	4	Fair,	Guard pulley on dinker,	Complied.
BRAINTREE.								
Old Colony Laundry,	Laundry,	3	5	–	–	Fair,	Guard set screws,	Complied.
Williams & Kneeland,	Boots and shoes,	135	50	–	–	Good,	New cable for elevator; guard set screws.	Complied.
D. B. Closson,	Boots and shoes,	192	50	–	1	Good,	Procure certificate,	Complied.
Jenkins Mfg. Co.,	Braids and shoe laces.	25	25	–	–	Fair,	Guard set screws,	Complied.

Digitized by Google

DISTRICT NO. 8 — *Continued.*

NAME OF FACTORY OR WORKSHOP.	Goods Manufactured.	Number Employed.				Sanitary Condition.	Orders Given.	Compliances.
		Males.	Females.	Under 14.	14 to 16.			
BRIDGEWATER.								
Jenkins Bros.,	Leather board,	16	–	–	1	Fair,	Guard set screws, belts running through floors, pulleys running calender, wet machine and rag cutter; post time tables; procure certificate.	Complied.
W. B. May & Co.,	Ladies' slippers,	7	5	–	1	Fair,	Post time tables; procure certificate; control power on sewing machine shaft.	Closed.
H. J. Miller,	Tacks and nails,	5	1	–	–	Fair,	Guard set screws,	Complied.
Bridgewater Box Co.,	Wood boxes,	35	–	–	–	Fair,	Guard swing saw; bar to outside doorway, second floor.	Complied.
W. H. McElwain & Co.,	Boots and shoes,	350	100	–	–	Good,	Guard set screws; box pulley on dinker; designate water-closets; post time tables; box belts running through floors; rail or box elevator hoisting gear.	Complied.
C. E. Tisdale & Co.,	Boots and shoes,	20	5	–	–	Fair,	Guard splitter and roller,	–
Henry Perkins,	Machinery,	45	–	–	–	Fair,	Guard set screws,	Complied.
EAST BRIDGEWATER.								
Hosea Hathaway,	Wood boxes,	5	–	–	–	Fair,	Rail fly wheel and belt on planer; guard set screws; post time table.	Complied.

Digitized by Google

Carver Cotton Gin Co.,	Machinery,	192	3	–	–	Fair,	Guard set screws; box belt running dynamo.	Complied.
BROCKTON,								
George V. Scott,	Machinery,	6	–	–	–	Fair,	Guard set screws and coupling pins; box belt; rail fly wheels.	Complied.
Woodward & Wright,	Lasts,	25	–	–	–	Fair,	Guard set screws,	Complied.
E. & L. C. Keith,	Boots and shoes,	150	40	–	1	Fair,	Procure certificate; guard roller,	Complied.
Preston B. Keith,	Boots and shoes,	300	75	–	2	Fair,	Procure certificates; guard skiver; keep sewing machine clear of strings, etc.	Complied.
R. B. Grover & Co.,	Boots and shoes,	225	75	–	–	Fair,	New cable for elevator,	Complied.
Union Shoe Co.,	Boots and shoes,	20	2	–	–	Fair,	Guard set screws; control power on sewing machine shaft; post time tables.	Complied.
M. A. Packard & Co.,	Boots and shoes,	235	65	–	1	Fair,	Guard set screws and skiver; box sewing machine shaft.	Complied.
Joyce & Fletcher,	Boots and shoes,	59	23	–	1	Fair,	Procure certificate,	Complied.
J. C. Jenkins,	Boots and shoes,	10	1	–	–	Fair,	Post time tables,	Complied.
Charles A. Eaton Co.,	Boots and shoes,	175	100	2	2	Fair,	Guard roller and splitter; repair shipper; illiterate minor to attend school.	Complied.
Packard & Field,	Boots and shoes,	160	40	–	–	Fair,	New cable for elevator,	Complied.
Brockton Pants Co.,	Clothing,	7	2	–	–	Fair,	Post time tables; separate closet for females.	Complied.
Edison Electric Illuminating Co.,	Electric light,	20	–	–	–	Fair,	Rail fly wheels,	Complied.
Myron F. Thomas,	Boots and shoes,	230	70	–	3	Fair,	Box pulleys on dinkers; designate closets.	Complied.
Empire Shoe Co.,	Boots and shoes,	70	20	–	2	Fair,	Guard set screws and coupling pins,	Complied.
A. C. Thompson & Co.,	General woodwork,	15	–	–	–	Fair,	Post time tables,	Complied.
Brockton Rand Co.,	Rands and heels,	25	25	–	4	Fair,	Post time tables in heel room,	Complied.
J. A. Roarty,	Cut leather,	4	1	–	–	Fair,	Post time tables,	Complied.

Digitized by Google

DISTRICT NO. 8 — *Continued.*

NAME OF FACTORY OR WORKSHOP.	Goods Manufactured.	Number Employed.				Sanitary Condition.	Orders Given.	Compliances.
		Males.	Females.	Under 14.	14 to 16.			
BROCKTON — *Continued.*								
F. L. Woodbridge,	Wood boxes,	6	–	–	–	Fair,	Guard set screws and openings in floors; rail belt and pulley on planer.	Complied.
C. Wakeling,	Leggins and leather coloring.	4	2	–	–	Fair,	Post time tables; box sewing machine shaft; control power on same.	Complied.
C. N. Leonard,	Shoe uppers,	11	11	–	–	Fair,	Post time tables; box sewing machine shaft; control power on same.	Complied.
F. B. Washburn Co.,	Confectionery,	33	17	–	1	–	Guard main belt,	Complied.
Thomas Bostock & Son,	Machinery,	3	–	–	–	Fair,	Guard set screws,	Complied.
Golden & Corcoran,	Sporting shoes,	16	4	–	–	Fair,	Guard set screws and roller; box sewing machine shaft; control power on same; guard set screws; post time tables.	Complied.
Brockton Book Bindery,	Book binding,	2	1	–	–	Good,	Post time tables,	Complied.
Frank Kingman,	Boots and shoes,	15	3	–	–	Fair,	Guard roller and splitter; control power on sewing machine shaft; rail back of leveller; post time tables.	Complied.
George G. Snow,	Boots and shoes,	500	150	–	10	Fair,	New hoisting cable for elevator,	Complied.
Stacy, Adams & Co.,	Boots and shoes,	175	50	–	–	Fair,	Guard set screws; adjust elevator hoisting gear.	Complied.

Digitized by Google

N. R. Packard & Co.,	Boots and shoes,	58	12	–	1	Fair,	Procure certificate; readjust shipper rope of elevator.	Complied.
Brockton Last Co.,	Lasts,	70	–	–	–	Good,	Guard set screws,	Complied.
A. M. Niles Shoe Co.,	Boots and shoes,	40	10	–	–	Good,	Guard set screws,	Complied.
Empire Laundry,	Laundry,	3	9	–	–	Fair,	Guard set screws,	Complied.
Kimball, Tisdale & Baker,	Boots and shoes,	29	6	–	–	Fair,	Guard set screws; rail back of leveller.	Complied.
G. A. Rogers,	Shoe fittings,	4	–	–	–	Fair,	Box sewing machine shaft; control power on same.	Complied.
Brockton Suspender Co.,	Suspenders,	2	10	–	–	Fair,	Post time tables; box sewing machine shaft; control power on same.	Complied.
J. S. Cook,	Pasted stock,	3	1	–	–	Fair,	Post time tables,	Complied.
W. B. Churbuck,	Boots and shoes,	4	2	–	–	Fair,	Control power on sewing machine shaft; post time tables.	Complied.
Brockton Knife Co.,	Circular knives,	2	1	–	–	Fair,	Post time tables,	Complied.
Reynolds, Drake & Gabel,	Boots and shoes,	55	15	–	1	Fair,	Repair shipper; guard skiver,	Complied.
C. H. Dean,	Shop clothing and sporting goods.	3	10	–	–	Fair,	Guard set screws; control power on sewing machine shaft.	Complied.
Bay State Rand Co.,	Rands,	6	11	–	–	Fair,	Guard set screws; post time tables,	Complied.
T. D. Barry & Co.,	Boots and shoes,	325	100	–	5	Fair,	Guard coupling pins; heel nailing machine; new elevator cable.	Complied.
Fields Bros.,	Boots and shoes,	50	10	–	–	Fair,	Control power on sewing machine shaft; guard set screws and coupling pins; post time tables.	Complied.
I. H. Fish,	Box toes,	3	2	–	–	Fair,	Post time tables,	Complied.
Small, Nesmith & Co.,	Boots and shoes,	30	10	–	–	Fair,	Guard set screws and coupling pins; control power on sewing machine shaft.	Complied.
Brockton & Eureka Box Toe Co.,	Box toes,	11	4	–	–	Fair,	Box belts and pulley on dinker; guard set screws; designate water-closets.	Complied.

Digitized by Google

DISTRICT NO. 8 — *Continued.*

NAME OF FACTORY OR WORKSHOP.	Goods Manufactured.	Number Employed.				Sanitary Condition.	Orders Given.	Compliances.
		Males.	Females.	Under 14.	14 to 16.			
BROCKTON — *Concluded.*								
Faulkner, Crafts & Co.,	Boots and shoes,	10	6	–	–	Fair,	Guard set screws and coupling pins; designate closets; post time tables.	Complied.
George B. Dunham,	Tacks,	3	–	1	–	–	Guard set screws; shipper for chopper; post time tables.	Complied.
A. S. Belcher,	Dressmaking,	–	3	–	–	Good,	Post time tables,	Complied.
Burr & Smith,	Machinery,	4	–	–	–	Fair,	Guard set screws,	Complied.
A. M. Herrod,	Boots and shoes,	193	67	–	8	Good,	Procure certificates,	Complied.
Ware, Lincoln & Thayer,	Boots and shoes,	55	20	–	–	Good,	Guard set screws and coupling pins,	Complied.
Williams Bros.,	Cut leather,	10	–	–	–	Fair,	Post time tables,	Complied.
F. E. White & Co.,	Boots and shoes,	190	60	–	1	Bad,	Guard set screws and coupling pins; clean water-closets.	Complied.
D. W. Field,	Boots and shoes,	450	150	–	2	Fair,	Guard set screws and coupling pins,	Complied.
L. F. Woodward,	Wood boxes,	8	–	–	–	Fair,	Guard set screws; box main pulley at entrance to engine room.	Complied.
W. L. Douglas Shoe Co.,	Boots and shoes,	400	200	–	2	Fair,	Procure certificates; shipper for sewing machine shafts; keep shafting clear of lint and strings; ventilate water-closets.	Complied.
McCarty, Sheehy & Kendrick Co.	Boots and shoes,	275	50	–	3	Fair,	Guard set screws; box pulley on dinker.	Complied.

Digitized by Google

Standard Rubber Co.,	Mackintoshes,	50	100	–	–	Fair,	Cover shaft running grinders and gear at end of grinders; guard set screws.	Complied.
Starratt, Higgins & Oakman,	Boots and shoes,	15	3	–	–	Fair,	Box sewing machine shaft and pulley on dinker.	Complied.
People's Co-operative Shoe Mfg. Co.	Boots and shoes,	16	3	–	–	Fair,	Post time tables; guard roller, splitter and set screws.	Complied.
W. W. Cross & Co.,	Tacks,	23	7	–	–	Good,	Shipper for chopper,	Complied.
Field, Hazzard Co.,	Boots and shoes,	160	40	–	3	Fair,	Procure certificates; new cable,	Complied.
Howard Bros.,	Printing,	7	–	–	–	Fair,	Guard set screws,	Complied.
P. B. Keith Co.,	Boots and shoes,	350	100	–	3	Good,	Control power on sewing machine shaft; rail fly wheels, crank shaft and rope transmission.	Complied.
C. E. Jennings,	General woodwork.	6	–	–	–	Fair,	Guard set screws; box belts running through floors and belt and pulley at stairway.	Complied.
Joyce & Fletcher,	Boots and shoes,	60	20	–	–	–	Shipper for sewing machine shaft; guard set screws.	Complied.
S. E. Packard & Son,	Paper boxes,	15	50	–	2	Good,	Rail crank shaft and fly wheel; procure certificates; door to be kept unlocked.	Complied.
CANTON.								
Draper Bros. Co.,	Shoe linings and feltings.	75	40	–	–	Fair,	Guard set screws,	Complied.
DEDHAM.								
Merchants' Woollen Mill,	Woollens,	206	160	–	7	Fair,	Guard set screws,	Complied.
Norfolk Mills,	Carpets,	131	39	–	3	Fair,	Procure certificates; repair safety,	Complied.
FOXBOROUGH.								
Van Choate Electric Co.,	Electric supplies,	50	–	–	–	Good,	Rail crank shafts and fly wheels; guard belts running through floors.	Complied.
Foxborough Foundry,	Heating apparatus,	24	–	–	–	Fair,	Pay weekly,	–

Digitized by Google

DISTRICT NO. 8 — *Continued.*

NAME OF FACTORY OR WORKSHOP.	Goods Manufactured.	Number Employed.				Sanitary Condition.	Orders Given.	Compliances.
		Males.	Females.	Under 14.	14 to 16.			
HALIFAX.								
H. M. Bosworth,	Wood boxes,	15	–	–	–	Fair,	Rail elevator opening,	Complied.
HANOVER.								
Lot Phillips & Co.,	Wood boxes,	35	–	–	–	Fair,	Guard set screws; provide communication.	Complied.
HOLBROOK.								
White, Wilbur & Co.,	Boots and shoes,	50	15	–	1	Fair,	Guard roller and skiver,	Complied.
G. H. Jennings,	Heels and box toes.	4	1	–	–	Fair,	Post time tables,	Complied.
Allen & Hodge,	General woodwork.	4	–	–	–	Fair,	Guard set screws; box belt and pulley on moulder.	Complied.
HULL.								
Hull Electric Light Station,	Electric light,	6	–	–	–	Fair,	Rail fly wheels,	Complied.
HYDE PARK.								
Readville Cotton Mills,	Cotton,	100	100	–	10	Fair,	Guard set screws; procure certificate	Complied.
Fairmount Mfg. Co.,	Ladies' wrappers,	–	–	–	–	–	Procure certificates,	Complied.
Universal Loom Co.,	Looms,	34	1	–	–	Good,	Post time tables,	Complied.
Hyde Park Times,	Printing,	2	2	–	–	Fair,	Post time tables,	Complied.
Norfolk County Gazette,	Printing,	5	1	–	–	Fair,	Post time tables; guard set screws,	Complied.
Hyde Park Steam Laundry,	Laundry,	2	6	–	–	Fair,	Guard set screws,	Complied.

Digitized by Google

Boston Gossamer Rubber Co.,	Mackintoshes,	200	300	–	3	Good,	Procure certificates,	Complied.
Clifton Mfg. Co.,	Rubber balls,	1	3	–	–	Good,	Post time tables; provide communication	Complied.
Clifton Mfg. Co.,	Rubber goods,	19	1	–	1	Fair,	Procure certificate; children under 13 years not to be employed.	Complied.
Plymouth Mfg. Co.,	Rubber-coated cloth.	22	–	–	–	Fair,	Post time tables,	Complied.
Somerset Knitting Co.,	Bicycle and golf stockings.	2	2	–	–	Bad,	Post time tables; separate closet for females.	Complied.
Edward I. Seavey,	General woodwork,	12	–	–	–	Fair,	Adjust elevator gear; rail well,	–
KINGSTON.								
Pilgrim Stove Foundry,	Stoves and ranges,	20	–	–	–	Fair,	Guard set screws,	Complied.
MIDDLEBOROUGH.								
C. H. Alden & Co.,	Boots and shoes,	115	35	–	2	Fair,	Control power on sewing machine shaft; procure certificates.	Complied.
Keith & Pratt,	Boots and shoes,	66	9	–	–	Fair,	Guard roller and set screws,	Complied.
Murdock Parlor Grate Co.,	Fancy brass work,	45	–	–	–	Fair,	Guard set screws; repair gates to elevator entrances; new elevator cable.	Complied.
James M. O'Donnell,	Boots and shoes,	40	10	–	–	Fair,	Guard set screws; keep fire buckets filled.	Complied.
Clark & Cole,	Wood boxes,	45	–	–	–	Fair,	Rail crank shaft and fly wheel,	Complied.
Leonard, Shaw & Dean,	Boots and shoes,	50	20	–	1	Good,	Procure certificate; rail back of leveller.	Complied.
Leonard & Barrows,	Boots and shoes,	225	75	–	7	Fair,	Procure certificates; post time tables and list of minors; guard set screws and cup pins.	Complied.

Digitized by Google

DISTRICT NO. 8.—*Continued.*

NAME OF FACTORY OR WORKSHOP.	Goods Manufactured.	Number Employed.				Sanitary Condition.	Orders Given.	Compliances.
		Males.	Females.	Under 14.	14 to 16.			
MIDDLEBOROUGH — *Concluded.*								
Hathaway, Soule & Harrington,	Boots and shoes, .	150	50	–	–	Fair, .	Guard set screws; new elevator cable.	Complied.
H. G. Schlueter, ...	Fancy boxes, .	5	11	–	–	Fair, .	Post time tables; rail belt and pulley; guard set screws.	Complied.
NORFOLK.								
City Mills, ...	Felting, . .	100	12	–	2	Fair, .	Guard set screws, ...	Complied.
Norfolk Woollen Mills, . .	Shoddy, . .	25	–	–	–	Fair, .	Guard set screws, ...	Complied.
NORWOOD.								
N. M. Plympton, . . .	Books and book cloth.	65	50	–	2	Good, .	Post time tables; procure certificates; designate water-closets.	Complied.
PLYMOUTH.								
Plymouth Iron Mills, . . .	Tacks, nails and rivets	50	15	–	–	Fair, .	Guard set screws; shipper for chopper.	Complied.
Standish Worsted Mills, . .	Worsteds, . .	100	25	–	3	Fair, .	Procure certificates, ...	Complied.
Plymouth Woollen Mill, .	Woollens, . .	190	60	–	1	Fair, .	Guard belt; procure certificate, .	Complied.
QUINCY.								
Hobart & Holmes, . . .	Ladies' wrappers,	1	25	–	1	Fair, .	Post time tables; control power on sewing machine shafting.	Out of business.
Badger Bros., ...	Machinery and granite polishing.	40	–	–	–	Fair, .	Guard set screws, ...	Complied.

Digitized by Google

M. Rosenfield,	Ladies' wrappers,	1	30	–	2	Fair,	Procure certificates,	Complied.
Old Colony Boot & Shoe Co.,	Boots and shoes,	100	25	–	2	Fair,	Guard set screws, roller and splitter; procure certificate.	Complied.
W. B. White & Son,	Leather specialties.	12	23	–	–	Good,	Guard set screws; post time tables; designate closets; box shaft.	Complied.
Charles F. Bates,	Soap,	3	–	–	–	Fair,	Guard set screws,	Complied.
RANDOLPH.								
Bradley, Hagney & Leonard,	Boots and shoes,	150	40	–	3	Fair,	Box pulleys; guard set screws, skiver and roller; procure certificates.	Complied.
William H. Gibbons & Co,	Boots and shoes,	60	10	–	–	Fair,	Clean water-closet; procure certificate.	Complied.
Bryant Boot & Shoe Co.,	Boots and shoes,	45	5	–	–	Fair,	Guard set screws; designate closets,	Complied.
Haggerty & Sullivan,	Boots and shoes,	90	40	–	–	Fair,	Guard skiver and set screws; keep sewing machine shaft clear of strings, etc.	Complied.
Tileston Bros. Shoe Co.,	Boots and shoes,	100	25	–	2	Good,	Designate water closets; guard set screws; post time tables.	Complied.
ROCKLAND.								
Anderson Tack Co.,	Tacks,	7	1	–	–	Fair,	Shipper for chopper,	Complied.
E. T. Wright & Co.,	Boots and shoes,	100	25	–	–	Fair,	Post time tables; guard bolt in coupling.	Complied.
John Burdett,	Heels,	12	6	–	–	Fair,	Guard set screws and skiver; post time tables.	Complied.
Rice & Hutchins,	Boots and shoes,	278	50	–	4	Fair,	Procure certificates; box or rail pulley on dinker.	Complied.
F. F. Prior,	Stays,	6	4	–	–	Fair,	Post time tables,	Complied.

Digitized by Google

DISTRICT NO. 8 — *Continued.*

NAME OF FACTORY OR WORKSHOP.	Goods Manufactured.	Number Employed.				Sanitary Condition.	Orders Given.	Compliances.
		Males.	Females.	Under 14.	14 to 16.			
STOUGHTON.								
Charles Tenney,	Boots and shoes,	70	20	–	1	Fair,	Procure certificate; guard coupling pins; keep elevator entrances closed.	Complied.
H. H. Eldridge,	Last makers' supplies.	2	–	–	–	Fair,	Shipper for punch press,	Complied.
Upham Bros.,	Boots and shoes,	50	10	–	1	Fair,	Procure certificate,	Complied.
J. G. Phinney Counter Co.,	Cut leather,	115	60	–	7	Fair,	Minor under 13 years of age not to be employed.	Complied.
WALPOLE.								
Hollingsworth & Vose,	Paper,	80	–	–	–	Fair,	Guard set screws and gear on winder; rail belt on dynamo.	Complied.
F. W. Bird & Son,	Sheathing and box paper.	165	35	–	–	Fair,	Guard set screws and bevelled gear,	Complied.
Lewis Batting Co.,	Cotton batting,	58	8	–	2	Fair,	Guard set screws; post time tables,	Complied.
Chandler Adjustable Chair & Desk Co.	School furniture,	25	–	–	1	Fair,	Procure certificate; safety device for irregular moulder.	Complied.
WEYMOUTH.								
Fred. Cate,	Ladies' wrappers,	6	144	–	2	Good,	Procure certificates,	Complied.
East Weymouth Paper Box Co.,	Paper boxes,	3	11	–	1	Fair,	Post time tables; procure certificate.	Complied.

Digitized by Google

Gordon-Kiley Co.,	Boots and shoes,	38	12	–	–	Fair,	Guard set screws and coupling pins; control power on sewing machine shaft; post time tables.	Complied.
John P. Reardon,	Ladies' wrappers,	4	24	–	1	Good,	Procure certificate; post time tables; designate water-closets.	Complied.
Strong & Garfield Co.,	Boots and shoes,	190	35	–	–	Good,	Guard set screws; box or rail elevator hoisting gear.	Complied.
Edwin Clapp,	Boots and shoes,	185	40	–	–	Good,	Guard set screws; control power on sewing machine shaft south wing.	Complied.
J. Mashinchka,	Cigars,	2	3	–	–	Fair,	Post time tables; designate closets,	–
M. C. Dizer & Co.,	Boots and shoes,	475	75	–	6	Fair,	Guard set screws and bolts,	Complied.
E. Sherman Sons,	Wood and paper boxes.	13	12	–	1	Fair,	Guard set screws and coupling pins,	Complied.
A. O. Crawford & Co.,	Paper boxes,	32	12	–	1	Fair,	Procure certificate,	Complied.
Sherman Bros.,	Pasted stock,	10	14	–	–	Fair,	Guard roller, splitter and set screws,	Complied.
M. Sheehy & Co.,	Boots and shoes,	25	5	–	–	Fair,	Guard set screws; control power on sewing machine shaft.	Complied.
Bates & Slattery,	Boots and shoes,	45	5	–	1	Fair,	Control power on sewing machine shaft.	Complied.
WHITMAN.								
United States Shoe Co.,	Boots and shoes,	142	45	–	3	Fair,	Repair loose pulley and shipper on sewing machine shaft; box pulleys on dinkers; guard set screws; procure certificates.	Complied.
L. C. Bliss & Co.,	Boots and shoes,	255	75	–	2	Fair,	Rail back of levellers,	Complied.
Old Colony Boot & Shoe Co.,	Boots and shoes,	120	30	–	1	Fair,	Guard skivers and pulleys,	Complied.
Commonwealth Shoe & Leather Co.	Boots and shoes,	900	300	–	8	Fair,	Guard splitter; procure certificate,	Complied.
Holbrook & Keene,	Cut leather,	16	–	–	–	Fair,	Guard set screws,	Complied.

Digitized by Google

DISTRICT NO. 8 — *Concluded.*

NAME OF FACTORY OR WORKSHOP.	Goods Manufactured.	Number Employed.				Sanitary Condition.	Orders Given.	Compliances.
		Males.	Females.	Under 14.	14 to 16.			
WHITMAN — *Concluded.*								
Jenkins Bros., ...	Coffins, caskets and shanks.	59	26	–	4	Fair, .	Rail belt and pulley on planer and belt through floor; procure certificates.	Complied.
David B. Gurney, . . .	Tacks and nails, .	55	9	–	1	Fair, .	Guard set screws; shipper for chopper.	Complied.
Emil Johnson, ...	Heels, . . .	11	5	–	1	Fair, .	Guard gear on splitter; procure certificate.	Complied.
Clark Bros. & Co., . . .	General woodwork,	5	–	–	–	Fair, .	Guard band saw, ...	Complied.
Whitman Times, . . .	Printing, . .	2	2	–	–	Fair, .	Post time tables; separate closet for females.	Complied.

Digitized by Google

REPORT OF INSPECTOR SHEEHAN.

SIR: — I respectfully submit my annual tabulated report of the work performed in District No. 9, together with a few suggestions in regard to the inspection laws and the improvements made by their enforcement.

The law prohibiting the employment of children under thirteen years of age has been so well complied with that the new law forbidding their employment under fourteen years will be an easy matter for the inspector to enforce; for I must say, to the credit of the employers, that they were gradually doing away with child labor, especially in the larger factories, of all children under fourteen years of age.

The law relating to the employment of women and minors, called the fifty-eight hour law, has been carefully observed during the past year. I have received a few complaints, but upon investigation failed to find any cause to blame the employers, the girls remaining after hours without their knowledge and contrary to orders.

The sanitary conditions of the factories are improving every year, and, although I have issued a number of orders for additional closets during the year on account of increased numbers, there has been shown a disposition on the part of the employees to keep the closets and rooms in a clean and orderly condition.

In calling attention to the elevators in the factories and public buildings so often, I do so looking to a more thorough protection from the dangers connected with the operation of the elevator. The importance of this machine at this time is recognized to have attained a position in business life of such magnitude that to dispense with its services would almost necessitate a revolution in our mode of doing business. The elevator has so facilitated the capacity of elevating conveyance that there is no longer a hesitancy in the erections of high buildings. We are not satisfied to be carried to the top of the building in a reasonable length of time, but we must be simply jerked through space at a terrific rate of speed, without ever thinking of the dangers connected with the operation of the elevator. To suppose an elevator is ever absolutely safe is a delusion, and when the general public fully realize the fact, we can then hope for some reform in its use. There is no specific detail of the elevator that requires perfection more than the hoisting cables. In the constant ascent and descent of the elevator there is a continued process of bending and

Digitized by Google

straightening of the ropes, which in time causes crystallization, eventually completely destroying the elasticity of the wire, at which stage the ropes may part at any moment and without warning. The only precaution that can be taken in this matter is that the best grade of ropes, and a kind less liable to crystallization, be used, and proper care taken to prevent rust. Less than two hoisting ropes for an elevator of any pattern where hoisting ropes are used should be prohibited by law. A safety device to prevent the car of the elevator from falling, in case the rope should give way, is but a mechanical device in any event; although these devices are many times commendable for their efficiency when in good repair, they are liable to become deranged and worn out, which may occur at any time. If an elevator with a single rope should give way at a time when the safety is so deranged, there would be no alternative but for the car to drop to the bottom; but with two or more hoisting ropes, as they would never all break at the same time, an accident from that source would be very improbable. In my opinion, the only reliable safety is a multiplication of hoisting ropes.

The guarding of dangerous machinery, such as shafting and belting, cog wheels, fly wheels, exposed set screws and woodworking machinery, in particular, are carefully looked after, but still there are too many accidents. It is almost a weekly occurrence to read of a damage suit being filed against some manufacturer by one of his employees who has been employed to operate a certain piece of machinery. In all probability the machine was just as turned out of the factory of its maker, yet the person who purchased it became personally liable for damage caused by any of its defects. It seems to me that it would be no more than justice were the manufacturer of the machine compelled to give to the public a construction supplied with all the known safeguards for its kind, or, practically speaking, that the builders should assume some responsibility for the damage caused by their own defective productions; and, could such a condition of affairs be brought about, I think we would then have removed the cause for a large percentage of the accidents that now occur in our manufacturing establishments.

To the law requiring that employers of females shall provide seats for their use I have given considerable attention this year, and found but one mercantile establishment violating its provisions. I notified the manager, and he immediately complied with the law. Whether the employees are allowed to use

Digitized by Google

their seats, or not, is another question; and, while I have received statements from others than the employees themselves for and against, I have been unable to find an employee who would say that she had been deprived of the use of the seat at such times as she could consistently occupy it. There is no more just law on the statute books of this State than this act, and every effort is made to have its provisions strictly observed.

Summary.

Cities and Towns.	No. of Inspections	Number Employed.		Minors under 14 Years.		Minors between 14 and 16 Years.	
		Males.	Females.	Males.	Females.	Males.	Females.
Amesbury,	24	1,526	593	-	-	12	13
Beverly,	31	1,143	636	-	-	13	3
Bradford,	6	151	50	-	-	-	-
Danvers,	11	298	93	-	-	-	-
Georgetown,	6	247	50	-	-	-	1
Groveland,	3	247	149	-	-	11	8
Gloucester,	10	403	246	-	-	4	4
Haverhill,	179	6,300	2,789	-	-	33	29
Ipswich,	3	295	357	-	-	15	14
Lynn,	165	8,729	3,821	-	-	52	34
Marblehead,	13	364	235	-	-	-	-
Manchester,	4	63	-	-	-	-	-
Middleton,	2	61	34	-	-	2	-
Newburyport,	21	1,139	630	-	-	16	1
Newbury,	3	91	15	-	-	4	-
West Newbury,	2	59	17	-	-	-	-
Peabody,	25	1,419	209	-	-	7	2
Rockport,	1	1,000	-	-	-	-	-
Rowley,	8	204	34	-	-	-	-
Salem,	51	2,679	1,645	-	3	37	44
Saugus,	4	49	39	-	-	-	-
Topsfield,	2	31	19	-	-	-	-
Totals,	574	26,498	11,661	-	3	256	153

Number of establishments inspected,	574
Number of elevators inspected,	250
Number of orders issued,	220
Number of compliances,	220
Total number of persons employed,	38,159
Total number of males employed,	26,498
Total number of females employed,	11,661
Number of male minors between thirteen and fourteen years,	-
Number of female minors between thirteen and fourteen years,	3
Number of male minors between fourteen and sixteen years,	256
Number of female minors between fourteen and sixteen years,	153

Digitized by Google

DISTRICT No. 9, ... JOHN J. SHEEHAN, *Inspector*.

NAME OF FACTORY OR WORKSHOP.	Goods Manufactured.	Number Employed.				Sanitary Condition.	Orders Given.	Compliances.
		Males.	Females.	Under 14.	14 to 16.			
AMESBURY.								
Charles D. Pecker, . . .	Boots and shoes, .	165	107	–	10	Good, .	Provide new cable for elevator; guard shafting on fourth floor.	Complied.
Currier & Cameron Co., . .	Carriages, . .	50	–	–	–	Good, .	Guard shafting and pulleys on first floor.	Complied.
Hassett & Hodge, . . .	Carriages, . .	41	4	–	–	Good, .	Post time table, ...	Complied.
BEVERLY.								
Murray & Cone, ...	Boots and shoes, .	75	50	–	–	Fair, .	Cover set screws on shafting; guard shafting in stitching room.	Complied.
Woodbury Bros., . . .	Boots and shoes, .	230	150	–	14	Fair, .	Change pulley on elevator machinery; guard shafting in stitching room.	Complied.
Charles E. Lefavour, . . .	Boots and shoes, .	15	–	–	–	Good, .	Guard roller machine, . . .	Complied.
Sadie J. Fortier, ...	Shoe stitching, .	–	10	–	–	Good, .	Box belts; cover set screws; guard shafting; provide shipper for belt in stitching room.	Complied.
Myron Woodbury, . . .	Boots and shoes, .	12	–	–	–	Fair, .	Box belts; repair hoisting machinery of elevator and safety device on car.	Complied.
George H. Allen, . . .	Wood and paper boxes.	16	26	–	–	Good, .	Cover set screws on shafting, . .	Complied.

Digitized by Google

Fred A. Taylor,	Boxing gloves,	4	16	–	–	Good,	Post time table; guard shafting; provide shipper for belt in stitching room.	Complied.
Bay State Shoe Co.,	Boots and shoes,	45	30	–	1	Fair,	Post time tables; guard shafting; provide loose pulley and shipper for belt in stitching room.	Complied.
Rufus E. Larcom,	Boots and shoes,	34	33	–	–	Fair,	Repair safety device on dinker machine; guard shafting; provide shipper for belt in stitching room.	Complied.
Brown & Downing,	Boots and shoes,	25	20	–	–	Fair,	Guard shafting; provide shipper for belt in stitching room.	Complied.
J. A. Wallis & Co.,	Boots and shoes,	75	50	–	–	Fair,	Guard shafting in stitching room,	Complied.
Chebaco Co.,	Leather,	10	–	–	–	Good,	Guard fly wheel of engine,	Complied.
GEORGETOWN.								
Pentucket Shoe Co.,	Boots and shoes,	40	20	–	–	Fair,	Provide shipper for belt in stitching room; repair ratchets on the sides of elevator well.	Complied.
GROVELAND.								
Groveland Mills Co.,	Dress goods,	247	149	–	19	Good,	Guard elevator well on the second, third and fourth floors.	Complied.
HAVERHILL.								
Russ Bros.,	Boots and shoes,	27	18	–	–	Fair,	Post time table; guard shafting in stitching room.	Complied.
Haverhill Tack Co.,	Tack nails,	8	–	–	–	Good,	Post time table,	Complied.
J. C. Ivory & Co.,	Boots and shoes,	28	2	–	–	Fair,	Provide new cable for elevator; box pulley and shafting near stairway on third floor.	Complied.
George S. Smith & Son,	Leather board,	12	2	–	–	Good,	Post time table,	Complied.
M. C. Cram & Co.,	Boots and shoes,	100	75	–	–	Good,	Post time tables; guard shafting in stitching room.	Complied.

Digitized by Google

DISTRICT NO. 9 — *Continued.*

NAME OF FACTORY OR WORKSHOP.	Goods Manufactured.	Number Employed.				Sanitary Condition.	Orders Given.	Compliances.
		Males.	Females.	Under 14.	14 to 16.			
HAVERHILL — *Continued.*								
Wingate Shoe Co.,	Boots and shoes,	28	12	–	–	Fair,	Post time tables; guard roller machine and shafting in making room; box belt on fourth floor; guard shafting; provide shipper for belt in stitching room.	Complied.
Ernest L. Wood & Co.,	Wood and paper boxes.	5	20	–	–	Good,	Guard staying machine,	Complied.
A. A. Hudson,	Innersoles,	3	9	–	–	Good,	Post time tables; designate water-closets; box belts, gear wheels and pulleys of roller and dinker machines.	Complied.
George A. Burnham,	Counters,	15	1	–	–	Good,	Post time table,	Complied.
F. S. & H. H. Gage,	Shoes,	40	10	–	–	Fair,	Provide safety for dinker machine,	Complied.
Henry B. George & Co.,	Boots and shoes,	55	25	–	–	Fair,	Provide new cable for elevator; repair safety device on car.	Complied.
H. E. Guptell,	Slippers,	20	20	–	–	Fair,	Guard shafting; provide shipper for belt in stitching room.	Complied.
Carleton & Dow,	Shoe soles,	12	–	–	–	Good,	Provide new cable for elevator,	Complied.
Mrs. Belle Scoll,	Shoe stitching,	4	16	–	–	Good,	Guard shafting; provide shipper for belt in stitching room.	Complied.
P. N. Wadleigh,	Boots and shoes,	84	6	–	1	Fair,	Provide new cable for elevator,	Complied.
Julius B. Stark,	Silk embroideries,	4	4	–	–	Good,	Post time table,	Complied.

Digitized by Google

J. F. Curtin & Foss,	Boots and shoes,	38	2	-	-	Fair,	Box gear wheels of nailer machine,	Complied.
G. W. Rice,	Boots and shoes,	20	-	-	-	Fair,	Provide new pulleys and belts for elevator machinery.	Complied.
Thompson & Leavitt,	Boots and shoes,	16	4	-	-	Fair,	Post time table; provide loose pulley and shipper for belt in stitching room.	Complied.
Crowley & Shea,	Pasted shoe stock,	11	2	-	-	Good,	Box belts on fifth floor,	Complied.
Eldredge & Demeritt,	Boots and shoes,	8	2	-	-	Fair,	Cover set screws on shafting; provide shipper for belt in stitching room.	Complied.
Millay Last Co.,	Shoe lasts,	12	-	-	-	Good,	Provide shippers for belts of turning machines.	Complied.
Wiley & Brickett,	Boots and shoes,	35	-	-	-	Fair,	Box gear wheels of nailer machine,	Complied.
Mary E. Walker,	Shoe stitching,	-	6	-	-	Good,	Guard shafting; provide loose pulley and shipper for belt.	Complied.
Henry Merrill,	Shoe stitching,	2	23	-	-	Good,	Provide shipper for belt,	Complied.
Hussey & Hodgdon,	Boots and shoes,	40	20	-	1	Fair,	Provide shipper for belt in stitching room; place railings around belts and pulleys on the floor of making room.	Complied.
Gale Shoe Mfg. Co.,	Boots and shoes,	305	145	-	1	Fair,	Guard fly wheel and crank shaft of engine; box belt and gear wheels of nailer machine; designate water-closets.	Complied.
H. S. Sprague,	Boots and shoes,	35	1	-	-	Fair,	Box belt on fifth floor; guard elevator well on second, third and fourth floors.	Complied.
Little River Mill,	Dress goods,	36	25	-	1	Good,	Guard fly wheel and crank shaft of engine.	Complied.
O. S. Currier,	Paper boxes,	20	25	-	1	Good,	Provide new cable for elevator; box belts on third floor and fly wheel of pressing machine.	Complied.

Digitized by Google

DISTRICT NO. 9 — *Continued.*

NAME OF FACTORY OR WORKSHOP.	Goods Manufactured.	Number Employed.				Sanitary Condition.	Orders Given.	Compliances.
		Males.	Females.	Under 14.	14 to 16.			
HAVERHILL — *Concluded.*								
W. C. Lewis Shoe Co.,	Boots and shoes,	100	50	–	–	Fair,	Provide new cable for elevator; box belts, pulleys and shafting on floor of making room.	Complied.
Noyes, Read & Co.,	Boots and shoes,	90	60	–	–	Fair,	Guard shafting; provide shipper for belt in stitching room.	Complied.
Thomas Doherty,	Boots and shoes,	11	11	–	–	Fair,	Guard shafting; provide shipper for belt in stitching room; designate water-closets.	Complied.
Evans Bros. Shoe Co.,	Slippers,	16	2	–	–	Good,	Designate water-closets,	Complied.
T. M. Arnold,	Shoe soles,	9	–	–	–	Good,	Repair hoisting machinery of elevator.	Complied.
Chick Bros.,	Boots and shoes,	400	250	–	16	Fair,	Box gear wheels of nailer machine; place guard railing around pulleys and belts in basement.	Complied.
Webster & Tabor,	Boots and shoes,	100	50	–	–	Good,	Repair hoisting machinery of elevator.	Complied.
Poor & Dow,	Slippers,	70	10	–	–	Good,	Post time tables,	Complied.
George M. Chase,	Boots and shoes,	40	–	–	–	Fair,	Guard dinker and roller machines,	Complied.
Charles K. Fox,	Boots and shoes,	50	–	–	–	Fair,	Guard roller machine,	Complied.
Fox Heel Co.,	Heels,	3	3	–	–	Good,	Designate water-closets,	Complied.

Digitized by Google

Patten Shoe Co.,	Bicycle shoes,	50	25	–	–	Fair,	Post time tables; guard shafting; provide shippers for belts in stitching room; guard roller machine; cover set screws on shafting; box belt on third floor; guard crank shaft of engine; provide communication between engineer's room and each floor of factory.	Complied.
Haverhill Wood Heel Co.,	Wood heels,	10	–	–	–	Good,	Box pulleys and shafting on first floor.	Complied.
Frank Ward,	Laundry,	4	6	–	–	Good,	Post time table,	Complied.
Jennings & Hayes,	Boots and shoes,	33	2	–	–	Fair,	Box belts on third floor; guard shafting in stitching room.	Complied.
B. P. Connors,	Shoe stitching,	–	15	–	–	Good,	Guard shafting; provide shipper for belt.	Complied.
Wesley Preston,	Pasted shoe stock,	2	4	–	–	Fair,	Post time table,	Complied.
Pentucket Steam Laundry,	Laundry,	3	12	–	–	Good,	Post time table; designate closets,	Complied.
A. Roberts & Co.,	Men's worsted suitings	20	6	–	–	Good,	Post time tables,	Complied.
Twombly & Rouleau,	Boots and shoes,	28	2	–	–	Fair,	Provide new cable for elevator; adjust hoisting machinery.	Complied.
IPSWICH.								
Ipswich Upper Mills,	Hosiery,	217	329	–	26	Good,	Box belt in spinning room; adjust hoisting cable and machinery of elevator No. 1.	Complied.
Millett & Woodbury,	Boots and shoes,	25	15	–	–	Fair,	Guard roller and dinker machines,	Complied.
LYNN.								
Williams & Clark,	Boots and shoes,	150	100	–	–	Fair,	Provide new cable for elevator; adjust hoisting machinery.	Complied.

Digitized by Google

DISTRICT NO. 9 — *Continued.*

NAME OF FACTORY OR WORKSHOP.	Goods Manufactured.	Number Employed.				Sanitary Condition.	Orders Given.	Compliances.
		Males.	Females.	Under 14.	14 to 16.			
LYNN — *Continued.*								
A. F. Smith,	Boots and shoes,	250	100	–	–	Fair,	Provide two new cables for elevator; guard opening in floor of dynamo room.	Complied.
William Porter & Son,	Boots and shoes,	155	70	–	–	Good,	Guard shafting in stitching room; guard fly wheels of beating-out machines.	Complied.
The Excelsior Laundry Co.,	Laundry,	7	16	–	–	Good,	Post time tables,	Complied.
John Lane & Son,	Slippers,	35	25	–	–	Good,	Post time tables; guard dinker machine; provide loose pulleys and shippers for belts in stitching room.	Complied.
George H. Burt,	Boots and shoes,	10	10	–	–	Fair,	Provide shipper for belt in stitching room; box belt in making room and gear wheels of nailer machine; guard roller machine.	Complied.
Skinner & Scott,	Wheels,	10	–	–	–	Good,	Provide new cable for elevator,	Complied.
Harney Bros.,	Boots and shoes,	200	150	–	–	Fair,	Post time tables; guard dinker machine and shafting in stitching room; provide new cable for elevator.	Complied.
Gardner, Beardsell & Co.,	Shoe counters,	75	12	–	–	Good,	Repair self-closing hatches of elevator well; adjust hoisting machinery of elevator.	Complied.

Digitized by Google

Russell & Co.,	Shoe stock,	12	–	–	–	Good,	Repair safety device on elevator car.	Complied.
Keck, Mosser & Co.,	Shoe soles,	16	–	–	–	Good,	Provide new cable for elevator,	Complied.
Melanson & Currier,	Boots and shoes,	50	30	–	–	Fair,	Guard shafting in stitching room; box belts in making room.	Complied.
Joseph Caunt,	Boots and shoes,	20	15	–	–	Fair,	Cover set screws on shafting; box belts in making room	Complied.
J. F. Harris, Jr.,	Boots and shoes,	39	24	–	–	Good,	Guard fly wheel of engine,	Complied.
James Cogswell,	Boots and shoes,	14	1	–	–	Fair,	Guard shafting; provide shipper for belt in stitching room.	Complied.
G. Edwin Smith,	Boots and shoes,	13	2	–	–	Fair,	Post time tables; guard dinker machine.	Complied.
J. A. Cook,	Boots and shoes,	52	18	–	–	Fair,	Post time tables,	Complied.
T. L. Spencer & Co.,	Boots and shoes,	20	10	–	–	Fair,	Post time tables; guard dinker machine; guard shafting and provide shipper for belt in stitching room.	Complied.
Marshall Shirt Co.,	Shirts,	5	25	–	–	Good,	Provide shipper for belt in stitching room.	Complied.
W. H. Ingalls,	Boots and shoes,	30	20	–	–	Fair,	Provide shipper for belt in stitching room.	Complied.
J. L. Sparks & Co.,	Heels,	12	–	–	–	Good,	Box gear wheels of heel pressing machine.	Complied.
F. W. Pinkham,	Shoes,	13	7	–	–	Good,	Guard shafting; provide shipper for belt in stitching room.	Complied.
Donahue & Co.,	Morocco leather,	60	–	–	–	Fair,	Box gear wheels of pin wheels; place railings around pin wheels.	Complied.
S. J. Hollis,	Boots and shoes,	70	30	–	–	Fair,	Provide new cable for elevator; place guard wires under belt operating elevator on third floor.	Complied.

Digitized by Google

DISTRICT NO. 9 — *Continued.*

NAME OF FACTORY OR WORKSHOP.	Goods Manufactured.	Number Employed.				Sanitary Condition.	Orders Given.	Compliances.
		Males.	Females.	Under 14.	14 to 16.			
LYNN — *Continued.*								
Luddy & Currier,	Boots and shoes,	100	75	–	1	Fair,	Adjust hoisting cable of elevator; repair safety device on car.	Complied.
Copeland, Eldridge & Co.,	Boots and shoes,	100	30	–	–	Fair,	Post time tables; guard shafting; provide shipper for belt in stitching room	Complied.
Lovell & Burnham,	Boots and shoes,	25	10	–	–	Fair,	Post time tables; cover set screws; guard roller machine and shafting; provide loose pulley and shipper for belt in stitching room.	Complied.
Curtis, Bailey & Co.,	Boots and shoes,	30	30	–	–	Fair,	Repair safety on dinker machine,	Complied.
James Haughton,	Innersoles,	20	–	–	–	Good,	Provide new cable for elevator,	Complied.
Woodward & Cochey,	Shoe findings,	30	10	–	–	Good,	Guard shafting in stitching room,	Complied.
C. P. Shillaber,	Boots and shoes,	38	29	–	–	Fair,	Guard roller, dinker and splitter machines.	Complied.
A. E. Little & Co.,	Boots and shoes,	130	75	–	2	Good,	Post time tables; guard shafting in stitching room.	Complied.
Faunce & Spinney,	Boots and shoes,	270	230	1	2	Fair,	Provide new cable for elevator; guard dynamo and belt in basement.	Complied.
Lynn Skirt & Wrapper Co.,	Skirts and wrappers	8	12	–	–	Good,	Post time table,	Complied.
Joseph A. Callahan,	Laundry,	4	10	–	–	Good,	Designate water-closets,	Complied.

Digitized by Google

J. F. Vella,	Wood heels,	8	2	–	–	Good,	Post time table; cover set screws; box shafting and pulleys on floor.	Complied.
Lynn Heel Co.,	Pasted shoe stock,	15	20	–	–	Fair,	Box gear wheel of pressing machine,	Complied.
George E. Nicholson & Co.,	Boots and shoes,	34	32	–	–	Fair,	Post time table,	Complied.
Putnam & Cobb,	Boots and shoes,	38	3	–	2	Fair,	Post time table; guard dinker machine.	Complied.
Cross & Tucker,	Boots and shoes,	160	133	–	–	Fair,	Provide new cable for elevator,	Complied.
J. W. Hall,	Shoe shanks,	4	4	–	–	Good,	Box fly wheel of moulding machine; repair safety on dinker machine.	Complied.
Thomas Collyer, Jr.,	Boots and shoes,	12	1	–	–	Fair,	Repair safety device on dinker machine.	Complied.
Littlefield & Plummer,	Wood and paper boxes.	55	45	–	3	Good,	Guard fly wheel of engine,	Complied.
Thomas W. Gardner,	Shoe lasts,	25	–	–	–	Good,	Box belt on fourth floor,	Complied.
Excel Shoe Form Co.,	Shoe patterns,	10	1	–	–	Good,	Box belt on fourth floor; guard shafting in stitching room.	Complied.
C. P. Buckley,	Pasted shoe stock,	10	5	–	–	Good,	Guard fly wheel of glazing machine,	Complied.
Quincy A. Towns Firm,	Shoe counters,	32	4	–	–	Good,	Box gear wheels of compressor machine; guard fly wheels of roller and skiver machines.	Complied.
Faunce & Spinney,	Boots and shoes,	400	300	–	–	Fair,	Provide two additional closets for females in stitching room.	Complied.
William B. Dibble,	Boots and shoes,	20	3	–	–	Fair,	Provide closet for females; provide safety device for dinker machine.	Complied.
Edmund J. Phelan,	Boots and shoes,	15	15	–	–	Good,	Post time tables; designate closets; guard shafting in stitching room.	Complied.
Welch & Landregan,	Boots and shoes,	180	120	–	7	Fair,	Box belt on fifth floor; guard shafting in stitching room.	Complied.
A. H. Smith,	Castings,	25	–	–	–	Good,	Box belts and pulleys on second floor.	Complied.

Digitized by Google

DISTRICT NO. 9 — *Continued.*

NAME OF FACTORY OR WORKSHOP.	Goods Manufactured.	Number Employed.				Sanitary Condition.	Orders Given.	Compliances.
		Males.	Females.	Under 14.	14 to 16.			
LYNN — *Concluded.*								
Maurice Flynn, ...	Boots and shoes, .	125	75	–	2	Fair, .	Guard shafting in stitching room; repair safety device on dinker machine.	Complied.
Luther Johnson, ...	Boots and shoes, .	108	12	–	–	Good, .	Adjust hoisting machinery and belt of elevator.	Complied.
Lynn Cork Co., ...	Cork insoles, .	7	20	–	–	Good, .	Post time table, ...	Complied.
Lynn Incandescent Lamp Co., .	Incandescent lamps.	10	50	–	–	Good, .	Post time table; cover set screws on shafting.	Complied.
Guild Piano-forte Co., . .	Pianos, . . .	25	–	–	–	Good, .	Guard elevator well on second, third and fourth floors.	Complied.
Standard Crayon Co., . . .	Chalk and oil crayons.	11	53	–	8	Fair, .	Post time tables, ...	Complied.
A. & A. D. Fisher, . . .	Slippers, . .	42	18	–	–	Fair, .	Guard roller and dinker machines, .	Complied.
General Electric Co., . . .	Dynamos, . .	1,634	261	–	48	Good, .	Box pulleys and belts of high pressure drill in factory J.	Complied.
MARBLEHEAD.								
Bay State Improved Box Co., .	Wood and paper boxes.	6	5	–	–	Good, .	Post time table, ...	Complied.
John Lancy, Jr., . . .	Boots and shoes, .	100	50	–	–	Fair, .	Guard shafting in stitching room, .	Complied.
Sweet & Savory, . . .	Boots and shoes, .	12	10	–	–	Fair, .	Post time table; provide shipper for belt in stitching room.	Complied.

Digitized by Google

Chadwick & Snow,	Boots and shoes,	8	4	–	–	Fair,	Post time table; provide shipper for belt in stitching room	Complied.
Humprey & Paine,	Boots and shoes,	12	8	–	–	Fair,	Post time table; provide shipper for belt in stitching room.	Complied.
S. H. Sparhawk & Son,	Boots and shoes,	41	21	–	–	Good,	Post time tables; guard shafting; provide shipper for belt in stitching room.	Complied.
MIDDLETON.								
The Middleton Paper Co.,	Wall paper,	48	7	–	2	Good,	Box belts; repair self-closing hatches on second floor; provide new friction clutch to control the motive power.	Complied.
NEWBURYPORT.								
E. P. Dodge Shoe Mfg. Co.,	Boots and shoes,	130	100	–	14	Fair,	Guard shafting; provide loose pulleys and shipper for belts in both stitching rooms.	Complied.
PEABODY.								
A. B. Clark,	Morocco leather,	250	–	–	–	Fair,	Box belts; cover set screws on shafting on third floor.	Complied.
Frank Winchester,	Leather,	32	–	–	–	Good,	Box belts and pulleys of roller machine.	Complied.
Danvers Bleachery,	Bleaching and dyeing.	137	18	–	7	Good,	Box belts on second floor and gear wheels of Collander machine.	Complied.
SALEM.								
Lynch Bros.,	Morocco leather,	85	1	–	4	Fair,	Make illiterates attend evening school.	Complied.
Warren Page & Co.,	Pasted shoe stock,	82	36	–	16	Fair,	Make illiterate minors attend evening school.	Complied.
John E. Sias,	Boots and shoes,	10	5	–	–	Fair,	Post time table; guard shafting; provide loose pulley and shipper for belt to control motive power.	Complied.
Cobb, Bates & Yerxa,	Grocers,	30	9	–	–	Good,	Provide seats for females,	Complied.
Salem Steam Laundry,	Laundry,	8	17	–	–	Good,	Cover set screws on shafting; box belt on second floor.	Complied.

Digitized by Google

DISTRICT NO. 9 — *Concluded.*

NAME OF FACTORY OR WORKSHOP.	Goods Manufactured.	Number Employed.				Sanitary Condition.	Orders Given.	Compliances.
		Males.	Females.	Under 14.	14 to 16.			
SALEM — *Concluded.*								
Fowle & Daley, ...	Boots and shoes, .	86	44	–	4	Fair, .	Guard elevator well on each floor, .	Complied.
West India Fibre Co., . .	Curled coir hair, .	69	–	–	2	Fair, .	Guard fly wheel of crusher machine; guard pulley and belts of willower machine; guard pulleys and belts in picker room; box elevator well on first floor.	Complied.
Burke, Dugan Co., . . .	Boots and shoes, .	30	20	–	–	Fair, .	Post time tables; designate closets; provide shipper for belt in stitching room.	Complied.

Digitized by Google

Report of Inspector Dam.

Sir: — I have the honor to submit my first tabulated report of inspections made, where orders were issued, also a summary of work performed in District No. 10, comprising Berkshire and Franklin counties, during the period of my assignment to this district.

I would also add that close attention has been given to the enforcement of all laws, regarding the health, safety and comfort of those employed in the various factories, workshops and mercantile establishments of this district, as far as possible, considering the area to be visited.

It has been found necessary in a number of cases to give orders for better sanitary conditions than existed, and to separate closets and designate the same.

But one instance of locked doors during hours of work has occurred; the owner's attention being called to the law, a spring lock was applied.

One minor under twelve years of age was found at work with a certificate on file, signed by the superintendent of schools; this matter was promptly attended to.

In two instances has occasion required the making up of time lost during the week.

Two accidents occurred previous to my assignment to the district, both of which proved fatal. An investigation was made in each case, and report sent in as directed by you.

In conclusion, I would state that no complaints have been received of any violations of the laws, that they are being complied with, as far as a knowledge of them is understood. Many not knowing what is required, the inspector is frequently consulted; there is a disposition shown to fully comply with all orders or suggestions that are made, and in a spirit that is commendable.

Summary.

CITIES AND TOWNS.	Inspections.	Males.	Females.	Minors under 14 Years.	Minors between 14 and 16 Years.
Adams,	18	1,654	1,213	3	180
Ashfield,	5	18	-	-	-
Becket,	5	57	21	-	-
Buckland,	6	225	27	-	11
Cheshire,	2	42	-	-	2
Charlemont,	5	29	-	-	1
Clarksburg,	6	101	39	-	5
Conway,	4	63	44	4	7
Colrain,	7	199	67	1	21
Dalton,	12	406	420	-	25.

Digitized by Google

Summary — Concluded.

CITIES AND TOWNS.	Inspections.	Males.	Females.	Minors under 14 Years.	Minors between 14 and 16 Years.
Deerfield,	3	30	56	-	1
Erving,	7	283	7	1	3
Gill,	2	92	-	-	-
Greenfield,	14	402	124	-	9
Great Barrington,	8	431	221	-	19
Hinsdale,	1	149	103	-	18
Lee,	13	320	97	-	2
Leverett,	4	55	1	-	-
Montague,	11	820	323	-	39
Munroe,	1	64	-	-	-
North Adams,	48	2,967	2,407	3	206
New Marlborough,	7	33	3	-	1
Orange,	5	534	49	-	2
Pittsfield,	18	680	271	-	21
Rowe,	1	68	-	-	-
Sandisfield,	3	13	-	-	-
Shutesbury,	2	5	-	-	-
Shelburne,	3	42	-	-	1
Stockbridge,	1	2	-	-	-
Tyringham,	1	12	-	-	-
Wendell,	3	58	35	-	-
Williamstown,	5	181	92	-	20
	231	10,034	5,620	12	594

Number of inspections,	231
Number of orders issued,	93
Number of compliances,	92
Number under fourteen years,	12
Number between fourteen and sixteen years,	594
Number of males employed,	10,034
Number of females employed,	5,620
Total number employed,	15,654

Digitized by Google

DISTRICT No. 10, ... CHAS. A. DAM, *Inspector*.

NAME OF FACTORY OR WORKSHOP.	Goods Manufactured.	Number Employed.				Sanitary Condition.	Orders Given.	Compliances.
		Males.	Females.	Under 14.	14 to 16.			
ADAMS.								
Renfrew Mfg. Co., No. 1 mill, .	Cotton warps, .	50	38	–	9	Fair, .	Guard set screws; guard gears on railways; procure certificates for two minors.	Complied.
Renfrew Mfg. Co., No. 2 mill, .	Cotton cloth, .	314	224	–	20	Good, .	Procure certificate, ...	Complied.
Renfrew Mfg. Co., No. 6 mill, .	Cotton yarn, . .	64	27	–	8	Fair, .	Post time notices; designate closets; procure certificates for two minors.	Complied.
L. L. Brown Paper Co., lower mill.	Ledger paper, .	19	35	–	1	Good, .	Guard crank shaft of engine, . .	Complied.
Windsor Falls Mfg. Co., . .	Woollen goods, . .	42	22	1	6	Poor, .	Procure certificate; guard belt in wheel room; post time notices; clean men's closets.	Complied.
W. C. Plunkett & Sons, . .	Cotton warps, .	50	30	–	14	Good, .	Take minor under fifteen years from care of elevator; procure certificates.	Complied.
ASHFIELD.								
J. S. Gardner, ...	Dimension lumber,	4	–	–	–	Good, .	Guard belts on planer and lathe, .	Complied.
W. E. Ford, ...	Shingles, etc., .	4	–	–	–	Good, .	Guard belts on planer and engine, .	Complied.
BECKET.								
Westfield Braid Co., ...	Cotton braids, .	8	7	–	–	Fair, .	Post time notices, ...	Complied.
Becket Silk Co., ...	Sewing silk, .	3	3	–	–	Fair, .	Post time notices, ...	Complied.
M. E. Ballou & Son, ...	Baskets, . .	25	–	–	–	Fair, .	Guard belts and set screws, . .	Complied.

Digitized by Google

DISTRICT NO. 10 — *Continued.*

NAME OF FACTORY OR WORKSHOP.	Goods Manufactured.	NUMBER EMPLOYED.				Sanitary Condition.	Orders Given.	Compliances.
		Males.	Females.	Under 14.	14 to 16.			
CHESHIRE.								
W. B. Dean,	Barrel stock,	24	–	–	2	Good,	Procure certificates for two minors; post time notices.	Complied.
CHARLEMONT.								
Charlemont Co-operative Association.	Flour, grain, etc.,	2	–	–	1	Good,	Procure certificate; post time notice,	Complied.
W. M. Pratt,	Finish lumber,	3	–	–	–	Good,	Guard belts,	Complied.
CLARKSBURG.								
Linwood Mills,	Woollen cloth,	88	37	–	5	Good,	Guard set screws and gears; keep closets clean.	Complied.
CONWAY.								
DeWolf & Hassell,	Shoes,	20	10	3	1	Good,	Procure certificates for three minors,	Complied.
Tucker & Cook, Upper Mill,	White and colored warps.	25	25	–	3	Good,	Procure certificate for one minor,	Complied.
Tucker & Cook, Lower Mill,	Cotton yarns,	14	9	1	3	Good,	Procure certificate for one minor,	Complied.
COLRAIN.								
Griswoldville Mfg. Co., No. 1 mill.	Cotton cloth,	89	23	–	7	Good,	Guard set screws in picker room,	Complied.
Griswoldville Mfg. Co., No. 2 mill	Cotton cloth,	58	31	–	8	Good,	Repair elevator; procure certificate,	Complied.
F. W. Purrington,	Butter boxes,	3	–	–	–	Good,	Guard belts,	Complied.
Wm. W. Cary,	Bee hives,	12	–	–	–	Good,	Guard belts,	Complied.

Digitized by Google

Dalton.								
Dalton Shoe Co.,	Shoes,	100	50	–	22	Good,	Keep doors unlocked; procure certificate; designate closets; guard elevator well.	Complied.
Renfrew Mfg Co., No. 4 Mill,	Cotton yarns,	14	20	–	3	Good,	Post time notices; keep elevator gates closed; guard picker belts.	Complied.
Hampden Woolen Co.,	Woollen cloth,	38	26	–	–	Fair,	Guard set screws on shafting; replace guard on fulling mill.	Complied.
Deerfield.								
D. B. Arms,	Specie purses,	3	7	–	1	Good,	Procure certificate; post time notices; designate closets.	Complied.
Erving.								
Millers Falls Co., Upper Mill,	Iron novelty goods.	168	1	1	2	Good,	Procure certificate,	Complied.
Millers Falls Co., Lower Mill,	Wood handles,	13	6	–	1	Good,	Procure certificate; designate closets.	Complied.
Washburn & Heywood Chair Co.,	Chairs,	60	–	–	–	Good,	Post time notices,	Complied.
Greenfield.								
Cutler, Lyon & Field,	Shoes,	100	75	–	6	Good,	Guard shafting under stitching machines; post time notices.	Complied.
Nichols Bros,	Cutlery,	35	2	–	–	Good,	Post time notices; designate closets,	Complied.
Great Barrington.								
Endrick Woolen Co.,	Woollen cloth,	126	56	–	3	Good,	Guard set screws and belts,	Complied.
Berkshire Courier Co.,	Printing,	7	3	–	–	Good,	Post time notices,	Complied.
Hinsdale.								
Hinsdale Woolen Co.,	Woollen cloth,	149	103	–	18	Good,	Replace guard on fulling mill; post time notices; guard set screws on shafting; box belts.	Complied.

Digitized by Google

DISTRICT No. 10—*Continued.*

NAME OF FACTORY OR WORKSHOP.	Goods Manufactured.	Number Employed.				Sanitary Condition.	Orders Given.	Compliances.
		Males.	Females.	Under 14.	14 to 16.			
LEE.								
Housatonic Mill,	Blotting paper,	26	7	–	–	Good,	Guard cone belt,	Complied.
Thistle Wire Co.,	Wire cloth,	17	5	–	–	Good,	Designate closets,	Complied.
Smith Paper Co., Eagle Mill,	Tissue paper,	95	25	–	–	Good,	Post time notices,	Complied.
Smith Paper Co., Columbia Mill,	Copying paper,	30	25	–	–	Good,	Guard crank shaft of engine; post time notices; designate closets.	Complied.
Troy Steam Laundry,	Laundry,	4	6	–	1	Good,	Separate and designate closets; post time notices; procure certificate.	Complied.
Clark & Spencer,	Machinists,	20	–	–	–	Good,	Guard belt,	Complied.
Eaton, May & Robbins Paper Co.	Book and plate paper.	12	9	–	–	Fair,	Post time notices,	Complied.
Wm. Gray & Sons,	Cut stone,	20	–	–	1	Good,	Procure certificate; post time notice,	Complied.
MONTAGUE.								
International Turner's Falls Paper Mill.	Paper	40	6	–	–	Good,	Guard belts,	Complied.
Turner's Falls Cotton Mills,	Cotton cloth,	58	91	–	19	Good,	Guard set screws; post time notice; procure certificates.	Complied.
International Paper Co, Montague Mill.	Paper,	160	25	–	–	Good,	Post time notices,	Complied.
G. M. Shalton,	Grain,	1	–	–	–	Good,	Guard shafting in basement,	Complied.
P. J. Billings,	Shingles, lathes,	2	–	–	1	Good,	Guard belts; post time notice; procure certificate.	Complied.

Digitized by Google

MONROE.								
James Ramage Paper Co.,	Pulp box paper,	64	–	–	–	–	Guard belts of cutting machine and saw; guard all set screws; post time notice.	Complied.
NORTH ADAMS.								
N. L. Millard & Co.,	Shoes,	250	103	–	10	Poor,	Guard set screws; clean closets; procure certificates.	Complied.
Greylock Mills,	Cotton cloth,	130	100	–	10	Good	Procure certificates; guard mule carriage wheels; provide new cable for elevator; post time notices.	Complied.
Beaver Mills,	Cotton cloth,	125	95	–	10	Good,	Guard set screws,	Complied.
Canedy-Clark Shoe Co.,	Shoes,	168	92	–	11	Good,	Place shears and pulley of elevator in proper position.	Complied.
Frank J. Barber,	Leather bags,	20	6	–	4	Fair,	Procure certificates for four minors; post time notices; designate closets.	Complied.
Rice & McMillan,	Paper boxes,	30	25	1	7	Good,	Keep trap door closed; designate closets.	Complied.
S. B. Dibble & Co.,	Sash, doors, etc.,	25	–	–	–	Good,	Guard set screws; post time notice,	Complied.
Weber Bros.,	Shoes,	77	39	2	1	Good,	Designate closets; post time notices; guard shafting under machine tables; procure certificates.	Complied.
Wilkinson & Bliss Shoe Co.,	Shoes,	34	18	–	1	Good,	Designate closets,	Complied.
Alex. McDougall,	Wagons,	3	–	–	1	Good,	Post time notice; procure certificate,	Complied.
E. J. Cary & Co.,	Cut rags,	12	13	–	–	Good,	Post time notice,	Complied.
North Adams News,	Printing,	5	–	–	1	Good,	Post time notice; procure certificate,	Complied.
R. L. Henry,	Laundry,	6	6	–	–	Good,	Separate and designate closets,	Complied.
Wm. R. Clark & Son,	Laundry,	6	6	–	–	Fair,	Guard belt on ironing machine,	Complied.
A. L. & H. E. Bartlett,	Sash, doors, etc.,	50	–	–	–	Good,	Guard belt on moulding machine,	Complied.
Windsor Co.,	Printers of cloth,	535	130	–	14	Good,	Post time notice; designate closets; guard belts on three washers in bleach house.	Complied.

Digitized by Google

DISTRICT NO. 10 — *Concluded.*

NAME OF FACTORY OR WORKSHOP.	Goods Manufactured.	Number Employed.				Sanitary Condition.	Orders Given.	Compliances.
		Males.	Females.	Under 14.	14 to 16.			
NORTH ADAMS — *Concluded.*								
Arnold Print Works, . . .	Printers of cloth, .	231	916	–	23	Good, .	Guard crank shafts of both engines; guard stretching machines and belt in tentering room.	Complied.
P. J. Boland, ...	Clothing, . .	8	7	–	–	Good, .	Post time notice; separate and designate closets.	Complied.
NEW MARLBOROUGH.								
H. L. Barber Whip Co., . .	Whips, . . .	3	3	–	–	Good, .	Post time notices, ...	Complied.
Turner & Cook, ...	Whips, . . .	6	–	–	1	Good, .	Post time notices; procure certificate.	Complied.
ORANGE.								
Orange Shirt Co., . . .	Gents' shirts, .	3	28	–	1	Good, .	Guard set screws, ...	Complied.
Mann & Sprague, ...	Clothing, . .	10	21	–	1	Good, .	Procure certificate; guard shafting of sewing machines.	Complied.
PITTSFIELD.								
Stanley Instrument Co., . .	Electrical instruments.	10	–	–	–	Good, .	Guard set screws, ...	Complied.
O. W. Robbins Shoe Co., . .	Shoes, . . .	96	49	–	9	Good, .	Designate closets; procure certificates.	Complied.
Pontoosuc Woollen Manuf'g Co.,	Woollen cloth, .	189	110	–	23	Good, .	Post time notice; procure certificates; designate closets.	Complied.
Stanley Electric Co., . . .	Electrical goods, .	234	8	–	2	Good, .	Guard planer belt; procure certificates.	Complied.

Digitized by Google

The K. & W. Co.,	Incandes'nt lamps,	9	12	–	1	Good,	Procure certificate,	Complied.
Wilson & Harton,	Woollen cloth,	200	15	–	6	Good,	Post time notices,	Complied.
Teeling Bakery,	Bakers,	35	5	–	–	Good,	Guard sugar grinder; post time notices.	Complied.
Berkshire Steam Laundry,	Laundry,	3	6	–	–	Good,	Separate and designate closets,	Complied.
S. N. & C. Russell Manuf'g Co.,	Woollen cloth,	125	56	–	10	Good,	Post time notices,	Complied.
Morse Plating Co.,	Silver plating,	4	–	–	1	Good,	Post time notices; procure certificate.	Complied.
SANDISFIELD.								
Chas. E. Smith,	Shingles,	3	–	–	–	Good,	Guard shafting and belts,	Complied.
SHUTESBURY.								
Warren Ames,	Dimension lumber,	2	–	–	–	Good,	Guard belts,	Complied.
J. W. Watson,	Dimension lumber,	3	–	–	–	Good,	Guard belt on shingle machine,	Complied.
SHELBURNE.								
H. H. Mayhew & Co.,	Hardware,	31	–	–	1	Good,	Post time notices,	Complied.
TYRINGHAM.								
M. W. Stedman,	Wood rakes,	12	–	–	–	Good,	Guard shafting,	Complied.
WILLIAMSTOWN.								
Williamstown Manuf'g Co.,	Cotton cloth,	110	80	–	17	Good,	Guard set screws,	Complied.
W. H. Mason,	Lumber and stone-crushing.	6	–	–	–	Good,	Guard belts of engine and stone crusher.	Complied.

Digitized by Google

Report of Inspector Wasley.

Sir: — In connection with my tabulated report, I would most respectfully submit the following report of the duties coming under my supervision for the past year: —

In regard to the law relating to the hours of labor for women and minors I have received but one complaint, and that was from the employees of the largest stores in the city of Lowell. Many stores are excluded from this law, being mercantile establishments; however, those of a manufacturing nature, such as millinery stores, which manufacture hats and bonnets, also firms engaged in cloak and dress making, would come under this law. I have notified these firms, and they have arranged their legal time notice, conforming to the law and employing women but fifty-eight hours per week. Several manufactories having large government contracts to fill have informed me of their desire to work overtime, but have fully met all the requirements of the law by employing extra help.

The sanitary arrangements of the mills and workshops in the 11th district I consider are in good condition.

All dangerous machinery, such as set screws, belts, drums, gears, buzz planers, band saws, circular saws, turret machines, exhaust fans in the walls, crank shafts and fly-wheels on all engines, electric plants, and, in fact, all machinery where the employee would be liable to injury, I have carefully inspected, and in many instances recommended guards and other alterations, which have been readily complied with.

I have had but few fatal accidents in my district the past year. The 11th district being a very large manufacturing district, the machinery so varied, and considering the very large number of employees engaged in laboring at the different pursuits, I think the fatalities have been exceedingly small.

The new law enacted at the last session of the Legislature, relative to governing the hours of labor, has been readily complied with by the several corporations, lists being posted, in the entries, of all minors employed; also lists of all illiterate minors are being sent to the superintendents of the schools. I think this of great assistance to the inspectors and also to the school authorities, as it will have its effect of causing an increase in the evening school attendance.

I am pleased to report that the elevators in the mills and workshops are generally in good order. I am of the opinion that more care is being used, as many of the agents require reports of each elevator sent to the counting rooms every week.

Digitized by Google

The weekly payment law has given me but very little trouble this year, and from my observations I should say the law is fully enforced.

All the managers of theatres, and those in authority over halls and churches, are using due care in complying with the law in regard to placing portable seats in the aisles and crowding the galleries, and I find by investigation much caution used by all.

Section 1, chapter 136, Acts of 1895, an act relative to the heating of the street railway cars, in my opinion might be so arranged as to give the conductors full control of the heating of the cars, and not rely on the man at the central station to regulate the heat, as it is at the present time, for the passengers must suffer with the cold before reaching the central station.

All my recommendations and all orders issued have been cheerfully complied with by the agents and owners of the several manufactories in the 11th district.

Summary.

Inspections made,	505
Orders issued,	196
Compliances,	195
Males employed,	30,676
Females employed,	23,629
Children between thirteen and fourteen (male, 4; female, 4),	8
Children between fourteen and sixteen (male, 1,499; female, 971),	2,470
Total number of males and females employed,	54,305
Elevators inspected,	247

I submit a tabulated report of the cities and towns in the 11th district and the inspections made in each city and town for the past year: —

Lowell,	293	Tyngsborough,	4
Lawrence,	138	Tewksbury,	2
Methuen,	12	North Billerica,	5
North Chelmsford,	8	Andover,	11
Dracut,	7		
North Andover,	19	Total,	505
Westford,	6		

Digitized by Google

DISTRICT No. 11, ... FRANK C. WASLEY, *Inspector*.

NAME OF FACTORY OR WORKSHOP.	Goods Manufactured.	Number Employed.				Sanitary Condition.	Orders Given.	Compliances.
		Males.	Females.	Under 14.	14 to 16.			
LOWELL.								
Globe File Works, . . .	Files, . . .	6	–	–	1	Good, .	Guard pulley and belt on grinder, .	Complied.
Light, Heat & Power Co., . .	Light, heat, power,	4	–	–	–	Good, .	Guard pulley and belt on engine and dynamo; guard three belts and pulleys in electric light plant, buzz planer and band saw.	Complied.
J. Pilling Shoe Factory, . .	Shoes, . . .	160	100	–	7	Good, .	Guard small shaft near floor, . .	Complied.
Dumas Book Bindery, . .	Blank books, .	13	17	–	1	Good, .	File one certificate for minor, . .	Complied.
Lowell Gas Light Co., . .	Gas, . . .	135	–	–	–	Good, .	Guard fly wheels on four engines, .	Complied.
Beaver Garment Co., . . .	Dress fasteners, .	4	21	–	3	Fair, .	Guard shaft under sewing machine tables; procure three certificates.	Complied.
Booth Cotton Mills, . . .	Cotton and linen goods.	1242	1203	–	68	Good, .	Guard set screws in collars of shafting and on shearing machine; procure four certificates; designate water-closets.	Complied.
C. M. Holmes, ...	House finish, .	5	–	–	–	Good, .	Guard pulley and belt on jig saw; place guard on buzz planer.	Complied.
W. E Hatch, ...	House finish, .	8	–	–	–	Good, .	Guard belt running through floor, .	Complied.
W. Andrews, ...	Artificial limbs, .	3	1	–	–	Good, .	Guard two pulleys on band saw and buzz planer; guard rail around boiler.	Complied.
American Bolt Co., . . .	Bolts, . . .	23	–	–	–	Fair, .	Guard pulley on heading machine, .	Complied.

Digitized by Google

Lowell Box Co., ...	Boxes, . . .	23	–	–	–	–	Guard pulley and shaft on locking machine.	Complied.
Middlesex Steam Laundry, .	Laundered clothes,	7	23	–	–	Good, .	Guard fly wheel on engine, . .	Complied.
John Quinn, ...	Sawed and split wood.	7	–	–	–	Good, .	Guard electric motor, pulley and belt.	Complied.
Wood, Sherwood & Co , . .	Wire goods, . .	29	4	–	–	Good, .	Guard shaft under twisting machine table.	Complied.
Davis & Sargent, . . .	Wooden boxes, .	35	–	–	–	–	Guard pulleys and belts on double small planer.	Complied.
Highland Steam Laundry, . .	Laundered clothes,	10	15	–	1	Good, .	File one certificate, ...	Complied.
Appleton Mills, ...	Cotton goods, .	400	209	–	17	Good, .	Guard two pulleys overhead; file two certificates.	Complied.
Duff Machine Co., . . .	Drilling attachments.	3	–	–	–	Good, .	Guard or remove projections on pulleys.	Complied.
Sterling Mills, ...	Worsted goods, .	94	66	–	4	Good, .	Guard two belts and small pulley in dynamo room.	Complied.
Tremont & Suffolk, . . .	Cotton goods, .	1900	1600	–	158	Good, .	Guard crank shaft and belt in No. 1 mill; Corlis engine; belt and pulley in blower; belt in basement; belt running through floor in weave room; rail around rope drive; all pulleys in wheel room; procure six certificates.	Complied.
William Cogger, . . .	Sawed and split wood.	4	–	–	–	Good, .	Guard belt and pulley on dynamo, .	Complied.
N. H. Parkes & Sons, . .	Bobbins, spools, .	195	–	–	1	Good, .	Guard set screws; belt under stairs; procure one certificate.	Complied.
Jonas Gill, ...	Piano stools, .	5	1	–	–	Good, .	Guard pulley on band saw; place knife guard on circular saw.	Complied.
Novelty Plaster Works, . .	Corn plasters, .	6	4	–	–	Good, .	Guard opening, floor, . . .	Complied.

Digitized by Google

DISTRICT NO. 11 — *Continued.*

NAME OF FACTORY OR WORKSHOP.	Goods Manufactured.	Number Employed.				Sanitary Condition.	Orders Given.	Compliances.
		Males.	Females.	Under 14.	14 to 16.			
LOWELL — *Continued.*								
Union Iron Foundry, . . .	Iron castings, .	8	–	–	–	Fair, .	Guard set screws and belt, also pulley on motor.	Complied.
New England Motor Co., . .	Motors and dynamos.	9	–	–	–	Good, .	Guard set screws and belt; pulley on motor.	–
Bradshaw Mfg. Co., . . .	Rubber shoe gore,	11	4	–	–	Good, .	Post legal time notice, . . .	Complied.
E. P. Bryant, ...	Wagons, carriages.	11	–	–	–	Good, .	Guard buzz planer and band saw, .	Complied.
Massachusetts Cotton Mill, .	Cotton goods, .	600	1500	–	52	Good, .	Guard set screws in shafting of sizing machine; tubes and card grinder; two fans in walls; wood-rim pulley in oil room.	Complied.
F. P. Cheney, ...	Boxes, . . .	40	–	–	2	Good, .	Guard belt running through floor; procure one certificate.	Complied.
Faulkner's Mills, . . .	Woollen dress goods.	150	250	–	4	Good, .	Guard belts on one hundred and forty-one extractors; guard two large pulleys in basement; procure four certificates.	Complied.
Lowell & Suburban Street R.R. Co.	Power, . . .	38	–	–	–	Good, .	Guard belt and pulley on dynamo; box belt running through floor; file one certificate.	Complied.
Pevey Bros., ...	Iron castings, .	40	–	–	–	Good, .	Guard belt and pulley on motor; guard belt on fan; adjust safety device; file two certificates.	Complied.

Digitized by Google

C. I. Hood & Co.,	Hood's patent medicines.	100	250	–	2	Good,	Adjust safety device; file two certificates.	Complied.
C. F. Hatch,	Paper boxes,	7	35	–	3	Good,	File three certificates,	Complied.
Warburton Knitting Co.,	Knit goods,	2	4	–	–	Good,	Guard fly wheel on engine; guard shaft under benches.	Complied.
W. E. Walsh,	Worsted yarn,	18	16	–	4	Good,	Guard fly wheel on engine; guard pulley and belt on pump.	Complied.
J. H. Huntley,	House finish,	11	–	–	–	Good,	Guard pulley and belt on tinner; guard pulley on band saw.	Complied.
Belvidere Woollen Co.,	Woollen dress goods.	59	45	–	4	Good,	File one certificate,	Complied.
J. M. Stovers,	Shoes,	164	58	–	27	Good,	Guard elevator well hole,	Complied.
Shaw Hosiery,	Hosiery,	172	53	–	16	Good,	Guard pulley and belt on small engine.	Complied.
P. A. Mackenzie,	Sawed and split wood.	4	–	–	–	Fair,	Guard pulley on engine,	–
Lowell Waste Co.,	Paper stock,	7	8	–	–	Good,	Guard driving belt running through floor.	Complied.
Merrimack Croquet Co.,	Croquet sets,	6	2	–	–	Good,	Guard belt and pulley at end of room on second floor.	Complied.
Moxie Nerve Food Co.,	Moxie,	9	1	–	–	Good,	Place guard rail on top of machine room.	Complied.
James Pettigrew,	Repairs,	3	–	–	1	Fair,	File one certificate,	Complied.
Herbert E. Heselton,	Brushes,	5	1	–	2	Fair,	Guard shaft under bench; file two certificates.	Complied.
D. F. Cavanaugh,	Clothing,	12	10	–	–	Fair,	Post time table; designate water-closets.	Complied.
Derby & Morse,	Electric machinery.	27	–	–	–	Good,	Place guard rail on stairs leading to basement.	Complied.

Digitized by Google

DISTRICT NO. 11 — *Continued.*

NAME OF FACTORY OR WORKSHOP.	Goods Manufactured.	Number Employed.				Sanitary Condition.	Orders Given.	Compliances.
		Males.	Females.	Under 14.	14 to 16.			
LOWELL — *Continued.*								
Middlesex Co, ...	Woollen clothes, .	462	299	–	18	Good, .	Guard belt in upper entry; guard three belts in basement; guard belts in flannel room and rolling machine.	Complied.
F. C. Cheney, ...	Boxes, . . .	40	–	–	–	Good, .	Guard sewing saw; file one certificate.	Complied.
White Bros. & Co., . . .	Leather, . .	353	–	–	2	Good, .	Guard set screws, belts and pulleys in dynamo room; all belts running through floor in fan room; file two certificates.	Complied.
Merrimack Mfg. Co., . . .	Cotton goods, .	1650	1200	–	57	Good, .	Guard binder in No. 1 Picker; guard set screws on four feeders; guard rail on No 2 mill stairs; designate water-closets; guard pulley on engine; pulley on blank washing machine; belts running through floors; belt and pulley on tendering machine; guard rail on stairs.	Complied.
Edinburg Print Works, . .	Cotton printing, .	14	3	–	1	Good, .	Procure one certificate, . . .	Complied.
E. Duren, ...	Sawed and split wood.	6	–	–	–	Fair, .	Guard set screws, ...	Complied.

Digitized by Google

Lawrence Mfg. Co., . . .	Hosiery and knit underwear.	896	1731	–	170	Fair, .	Guard two circular saws; box belt in No. 7 mill; remove imperfect saw; designate two water-closets	Complied.
McDonald Bros., . . .	Steel rolls, . .	5	–	–	–	Good, .	Guard set screws in collars of shafting.	Complied.
Mass. Mohair Plush Co., . .	Mohair plush, .	65	80	–	–	Good, .	Guard gears on winding machine; two belts running through floor; guard elevator well.	Complied.
E. J. Carroll & Co., . . .	Plumbing and steam fitting.	13	–	–	–	Good, .	Place rail on stairs to basement, .	Complied.
Pickering Knitting Co., . .	Knit goods, . .	47	181	–	16	Good, .	Procure three certificates, . .	Complied.
Mussey's Steam Laundry, . .	Laundered goods,	6	6	–	–	Fair, .	Guard belt running through floor, .	Complied.
Lowell Co-operative Milk Association.	Butter, . . .	8	–	–	–	Good, .	Guard belts and pulleys on separator.	Complied.
Pratt & Forrest, ...	House finish, .	40	–	–	–	Good, .	Guard buzz planer, pulleys and belts; belts and pulleys on sanding machine; pulleys and belt on the S. A. Woods planer; belt running through floor; pulley and belt on moulding machine.	Complied.
Belvidere Steam Laundry, .	Laundered clothes,	3	5	–	–	Fair, .	Designate water-closet, . . .	Complied.
C. F. Hatch & Co., . . .	Paper boxes, .	10	30	–	2	Good, .	Procure one certificate, . . .	Complied.
Oakland Knitting Co., . .	Knit goods, . .	2	8	–	1	Good, .	Procure one certificate, . . .	Complied.
Lowell Electric Light Co., . .	Power, . . .	15	–	–	–	Fair, .	Guard set screws, pulley and belt on motor; guard opening in floor, .	Complied.
Scripture's Steam Laundry, .	Laundered clothes,	5	30	–	–	Good, .	Guard set screws in shafting, . .	Complied.
Fifield Tool Co., ...	Engine lathes, .	45	–	–	–	Good, .	Guard buzz planer, ...	Complied.
S. C. Smith, ...	Cap and set screws,	10	–	–	–	Good, .	Guard set screws, ...	Complied.
Lamson Cash C. S. Co., . .	Cash carrier, .	160	–	–	–	Good, .	Guard circular saw; adjust safety device on Whittier elevator.	Complied.
Lowell Weaving Co., . . .	Cotton duck, .	4	18	–	1	Good, .	Procure one certificate, . . .	Complied.

Digitized by Google

DISTRICT NO. 11 — *Continued.*

NAME OF FACTORY OR WORKSHOP.	Goods Manufactured.	Number Employed.				Sanitary Condition.	Orders Given.	Compliances.
		Males.	Females.	Under 14.	14 to 16.			
LOWELL — *Concluded.*								
Mongean & Myron,	Shoes,	30	15	–	–	Good,	Guard shaft under sewing machine tables.	Complied.
John Dennis & Co.,	Machinery,	14	–	–	–	Good,	Guard buzz planer.	Complied.
J. C. Ayer & Co.,	Patent medicines,	81	73	–	1	Good,	Adjust safety device; procure one certificate.	Complied.
Bates & Judson,	Feed for woollen cards.	6	–	2	–	Good,	File two certificates,	Complied.
Lowell Shoe Co.,	Shoes,	6	2	–	–	Good,	Guard two belts and pulleys on buffing machine.	Complied.
Hamilton Mfg Co.,	Cotton goods,	800	300	–	75	Good,	Guard belt in M. Farrington's room; shaft in pipe shaft; guard two elevator well holes, pulleys and belts in two rooms; guard front of large pulley on engine.	Complied.
J. Smith,	Piano stools,	3	–	–	–	Fair,	File one certificate,	Complied.
R. L. McBride,	Waste end convey,	3	–	–	–	Good,	Guard one belt,	Complied.
W. Jens,	Laundered clothes,	4	1	–	–	Good,	Post legal time notice,	Complied.
Massachusetts Mohair Plush Co,	Mohair plush,	95	80	–	8	Fair,	Guard four pulleys on two small engines.	–*
LAWRENCE.								
Kress Bros.,	Wagons, carriages,	18	–	–	–	Good,	Guard belts and pulleys on elevator machinery.	Complied.

Digitized by Google

Telegram Publishing Co., . .	Newspapers, job printing.	16	4	–	–	Fair, .	Guard elevator well on second floor; designate water-closets.	Complied.
Barrie & Unwin, . . .	House finish, .	4	–	–	–	Fair, .	Guard end of shaft on circular saw,	Complied.
Hampshire Worsted Co., . .	Worsted goods, .	4	2	–	–	Good, .	Post time table; designate water-closets.	Complied.
Lawrence Knitting Co., . .	Hosiery, . .	1	10	–	–	Good, .	Post legal time notice; guard doorway with guard rail.	Complied.
Towel Co., ...	Turkish towels, .	2	1	–	–	Good, .	Post time table, ...	Complied.
E. E. Burnham, ...	Leather belting, .	3	–	–	–	Good, .	Guard set screws in collars of shafting,	Complied.
Farwell Bleachery, . . .	Bleached goods, .	130	20	–	–	Good, .	Guard pulley on calender machine and buzz planer.	Complied.
Leland Belting Co., . . .	Leather belting, .	24	–	–	–	Good, .	Guard set screws; place guard rail on stairs to basement.	Complied.
Washington Mills, . . .	Woollen, worsted goods.	2794	2194	–	277	Good, .	Guard set screws in three rooms; belt on main drive in No. 3 mill; fly wheel; pulley pit; belt on binder, No. 5 mill; belts and pulleys on generator and main shaft on dynamo; procure two certificates.	Complied.
G. E. Kunhardt, ...	Woollen, worsted cloth.	189	72	–	–	Good, .	Guard belt on main drive; in two fans in wall.	Complied.
Prospect Mills, ...	Worsted yarn, .	90	46	–	41	Good, .	Guard belts and pulleys overhead, .	Complied.
Lawrence B. & M. Repair Shop,	Cars, . . .	280	–	–	–	Good, .	Guard set screws and pulleys on bolt machine.	Complied.
Stanley Mfg. Co., . . .	Shoe machinery, .	125	5	–	–	Good, .	Guard buzz planer, ...	Complied.
John Bingham, ...	Tin, copper, . .	24	1	–	–	Good, .	Guard set screws, ...	Complied.
Pacific Mills, ...	Cotton and worsted goods.	2321	2089	–	323	Good, .	Guard two pulleys on binders; two pulleys in basement; box belt in starch room.	–

* Recent order.

Digitized by Google

DISTRICT NO. 11 — *Continued.*

NAME OF FACTORY OR WORKSHOP.	Goods Manufactured.	Number Employed.				Sanitary Condition.	Orders Given.	Compliances.
		Males.	Females.	Under 14.	14 to 16.			
LAWRENCE — *Continued.*								
Fred Hartley, ...	Finished wood, .	28	1	–	–	Good, .	Guard set screws over washing machine and three belts near drying machine.	Complied.
J. M. Gurdy, ...	Ice cream, . .	5	–	–	–	Fair, .	Guard pulley, belt and shaft in frame room.	Complied.
Pemberton Co., ...	Cotton goods, .	260	380	–	10	Good, .	Guard set screws in three rooms, belts and pulleys on two extractors, belt and pulley on engine in splitting room; gears to cover on cotton opener; guard one buzz planer.	Complied.
Archibald Wheel Co., . .	Wheels, . .	25	–	–	–	Good, .	Guard set screws, ...	Complied.
D. M. Lane, ...	Carriages and wagons.	15	–	–	–	Good, .	Guard belt and pulley on surface planer.	Complied.
John Dustin, ...	Machinery, . .	18	–	–	–	Good, .	Guard set screws in collars of shafting.	Complied.
Merrimack Flyer Works, . .	Flyers and spindles,	5	–	–	–	Good, .	Guard set screws, ...	Complied.
Emmons' Loom Harness Co., .	Loom harnesses, .	90	60	–	1	Good, .	Guard pulley and belts on sizing machine.	Complied.
Merrimack Boiler Works, . .	Boilers, . .	10	–	–	–	Good, .	Guard fly wheel on punch and shearing machine; box pulley and belt.	Complied.

Digitized by Google

Repair Shop, ...	Repairing, . .	45	-	-	-	Good, .	Place guard in front of fly wheel on band saw.	-
The J. H. Horne & Son, . .	Paper and mill machinery.	60	-	-	-	Good, .	Place guard on buzz planer, . .	Complied.
Kimball Bros., ...	Shoes, . . .	200	100	-	5	Good, .	Guard shaft under bench in stock fitting room; file three certificates.	Complied.
Thomas O'Brien, . . .	House finish, .	8	-	-	-	Fair, .	Guard set screws, buzz planer, stairs leading to second story; rail across doorway.	Complied.
George Knowles, . . .	Mill work, . .	10	-	-	-	Fair, .	Guard pulley on band saw, fly wheels on gas engine; remove imperfect circular saw.	Complied.
Co-operative Association, . .	Sawed and split wood.	50	-	-	-	Good, .	Guard fly wheel on gas engine, .	Complied.
H. Elston, ...	Worsted clothes, .	2	6	-	-	Good, .	Guard set screws, ...	Complied.
Lawrence Water Works, . .	Power, . . .	15	-	-	-	Good, .	Place rail on stairs, ...	Complied.
W. F. Rutler, ...	Steam, water and gas fitting.	35	-	-	-	Good, .	Guard fly wheel on gas engine, .	Complied.
Atlantic Cotton Mill, . . .	Cotton goods, .	330	820	-	5	Good, .	Guard belts running through floors in wheel house; designate water-closets; procure one certificate.	Complied.
L. Sprague Co, ...	Bobbins and spools,	165	-	-	10	Good, .	Procure one certificate, . . .	Complied.
Lawrence Gas Co., . . .	Gas and power, .	20	-	-	-	Good, .	Guard fly wheel and belt on blower engine; guard belt and pulley on water pump, belts and pulley in soda room; guard opening in floor in Jordan's room.	Complied.
Department of Public Property,	Repairs, . .	41	-	-	-	Good, .	Guard buzz planer, ...	Complied.
Lawrence Manual Training School.	Repairs, . .	33	-	-	33	Fair, .	Guard two pulleys on band saw, pulley and belt on planer, pulley, fly wheel and belt on engine.	Complied.

Digitized by Google

DISTRICT No. 11 — *Continued.*

NAME OF FACTORY OR WORKSHOP.	Goods Manufactured.	Number Employed.				Sanitary Condition.	Orders Given.	Compliances.
		Males.	Females.	Under 14.	14 to 16.			
LAWRENCE — *Concluded.*								
C. H. Schonland,	Sausages and frankforts.	4	-	-	-	Good,	Guard all set screws in collars of shafting; guard pulleys and belts on engine.	Complied.
C. H. E. Keilham,	House finish,	12	-	-	-	Fair,	Guard pulley on band saw; fly wheel on engine.	Complied.
N. L. Holden,	House finish,	40	-	-	-	Good,	Guard set screws, belts and pulleys on band saw; belt on motor machine.	Complied.
Dixon Bros.,	House finish,	22	-	-	-	Good,	Guard set screws; pulley on band saw; rail platform and two flights stairs; two fly wheels and belt on engine guarded.	Complied.
Merrimack Paper Co.,	Paper,	80	20	-	1	Good,	Guard belt and pulley; designate water-closets; procure one certificate.	Complied.
W. R. Harts,	Iron castings,	30	-	-	-	Good,	Guard fly wheel on engine,	Complied.
Arlington Mills,	Woollen dress goods.	1500	1300	-	280	Good,	Guard fly wheel and belt on Sims and pumping engines; guard fly wheel on old Corlis engine; fly wheel on engine in lower weave room; guard one side of new engine crank shaft; rail on stairs.	Complied.

Digitized by Google

Brown & Ackroyd,	Ladies' dress goods.	25	82	–	14	Good,	Procure two certificates,	Complied.
The E. E. Burnham Co.,	Leather belting,	25	–	–	–	Good,	Guard fan in wall and belt running through floor.	Complied.
Rancourt & Laplante,	House finish,	9	–	–	–	Good,	Guard band saw and pulley,	Complied.
Lawrence Family Laundry,	Laundered clothes,	6	10	–	–	Good,	Guard two belts; post time table,	Complied.
Lawrence Duck Co.,	Duck,	150	100	–	4	Fair,	Guard set screws and circular saw; designate water-closets; procure two certificates; adjust safety device on elevator.	Complied.
W. L. Seaver,	House finish,	11	–	–	–	Good,	Guard circular saws and two buzz planers.	Complied.
Everett Mills,	Cotton goods,	553	557	–	37	Good,	Guard two belts running through floor; guard buzz planer; extend rail in engine room; procure one certificate.	Complied.
Lawrence Foundry Co.,	Iron castings,	80	–	–	1	Fair,	Procure one certificate,	Complied.
Lawrence Grist Mill,	Ground grain,	8	–	–	–	Good,	Guard two pulleys and belt in basement.	Complied.
NORTH ANDOVER.								
M. F. Stevens & Son,	Woollen goods,	125	125	–	4	Good,	Guard two shafts on wool dryer; guard belts with scuppers.	Complied.
N. A. Woollen Mills,	Woollen dress goods.	60	40	–	8	Good,	Guard set screws in collars of shafting and belt running through floor.	Complied.
Sutton Mills,	Woollen dress goods	68	32	–	2	Good,	Procure one certificate,	Complied.
J. Glennie & Co.,	Soap,	4	–	–	–	Fair,	Guard all elevators, well holes, openings in floors and floor in engine.	Complied.
J. Glennie,	Soap,	7	–	–	–	Fair,	Guard two fly wheels on engines,	Complied.
J. Glennie & Co.,	Tallow,	5	–	–	–	Fair,	Guard fly wheel on engine and elevator well holes on second floor.	–

Digitized by Google

DISTRICT NO. 11 — *Continued.*

NAME OF FACTORY OR WORKSHOP.	Goods Manufactured.	Number Employed.				Sanitary Condition.	Orders Given.	Compliances.
		Males.	Females.	Under 14.	14 to 16.			
NORTH ANDOVER — *Concluded.*								
Brightwood Mfg. Co., . .	Worsted dress goods.	38	14	–	4	Fair, .	File two certificates, . . .	Complied.
John Wilcox, ...	Wagons, . .	4	–	–	–	Fair, .	Place guard rail on stairs, . .	Complied.
Davis & Furber, ...	Machinery, . .	242	–	–	4	Good, .	Guard three belts running through floors; file one certificate.	Complied.
ANDOVER.								
Andover Electric Co., . .	Power, . .	4	–	–	–	Good, .	Guard pulley on Taylor engine; guard crank shaft on Fitchburg engine.	Complied.
Marland Mills, ...	Dress goods, .	125	75	–	15	Good, .	Guard large pulley and belt in mule room; procure one certificate.	Complied.
Ballardvale Spring Water Co., .	Lithia water, .	17	1	–	–	Good, .	Guard fly wheel on two engines, .	Complied.
Walter Donald, ...	Ink and lamps, .	3	–	–	–	Good, .	Guard pulley and belt on ink grinder.	–
Tuttle & Morrison, ...	Wagons, . .	7	–	–	–	Good, .	Guard belts and pulleys on main drive; circular saw; place guard rail around top of stairs.	Complied.
Barney Duffey, ...	Fertilizer and hides.	4	–	–	–	Fair, .	Guard fly wheel on engine, . .	Complied.
NORTH CHELMSFORD.								
Moor's Mills, ...	Worsted yarn, .	214	145	–	30	Good, .	Guard buzz planer and circular saw; crank shaft and fly wheel on Brown engine.	Complied.
N. Chelmsford Foundry, . .	Iron castings, .	50	–	–	–	Good, .	Guard fly wheel on engine; pulley and belt on binder.	Complied.

Digitized by Google

A. L. Brooks, . . .	Lumber, . .	18		–	–	Fair, .	Guard belts and pulleys on two planers; belt and pulley on band saw.	–
Lugden Bagging Co., . .	Camel's hair, .	6	–	–	–	Good, .	Guard water wheel and pulley; place rail on stairs to basement.	Complied.
NORTH BILLERICA.								
Talbot's Mills, ...	Flannels, dress goods.	203	112	–	16	Good, .	Guard set screws; large pulley overhead; scuppers around belts; pulleys on presses.	Complied.
METHUEN.								
Tremont Worsted Co., . .	Worsted goods, .	33	22	–	4	Good, .	File one certificate, ...	Complied.
A. Lee & Co., ...	Chemicals, . .	14	–	–	–	Good, .	Guard set screws; box belt running through floor.	Complied.
Methuen Co., ...	Cotton goods, .	150	200	–	12	Good, .	Guard two belts in weave room and dress room with scuppers; guard fly wheel and crank shaft.	Complied.
ngton Cotton Mills, . .	Cotton goods, .	228	317	–	14	Good, .	Guard pulley on band saw, large belt in basement of engine room; designate water-closets.	Complied.
J. M. Tenney, ...	Hats, . . .	99	26	–	–	Good, .	Guard set screws in basement; gears on wringing machine.	Complied.
Methuen Organ Co., . . .	Organs, . .	12	–	–	–	Good, .	Guard set screws in two rooms; belt running through floor; belt and pulley on saw frame.	Complied.
DRACUT.								
Merrimack Woollen Mill, . .	Dress goods, .	235	90	–	17	Fair, .	Guard belts, ...	–
Collins Woollen Mill, . .	Dress goods, .	230	185	–	41	Good, .	Guard fly wheel and belts; pulleys and belt on binder; rail on stairs; two belts running through floor; belt and belt holes on extractor and belt on main shaft; file two certificates.	Complied.

Digitized by Google

DISTRICT NO. 11 — *Concluded.*

NAME OF FACTORY OR WORKSHOP.	Goods Manufactured.	NUMBER EMPLOYED.				Sanitary Condition.	Orders Given.	Compliances.
		Males.	Females.	Under 14.	14 to 16.			
DRACUT — *Concluded.*								
F. J. Flemmings, . . .	Printing, . .	3	–	–	–	Fair, .	Guard set screws in collars of shafting.	Complied.
TYNGSBOROUGH.								
W. A. Sherburn, . . .	Lumber and wagons.	3	–	–	–	Fair, ..	Guard pulley and belt on large circular saw; pulley and belts on small planing machine; buzz planer.	Complied.
WESTFORD.								
Abbott & Co., ...	Worsted yarn, .	82	103	–	42	Good, .	Guard belt on binder, . . .	Complied.
Abbott Worsted Mill, . .	Worsted yarn, .	75	75	–	16	Fair, .	Guard belt and pulley on blower; designate water-closets.	Complied.
G. C. Moore, ...	Worsted yarn, .	50	100	3	19	Good, .	Guard fly wheel on engine, . .	Complied.

Digitized by Google

REPORT OF INSPECTRESS MARY E. HALLEY.

SIR: — In compliance with established custom, I herewith submit for your consideration my seventh annual report, giving an account of the various laws that are enforced by me and which I believe to be conducive to the best interest of employer and employee. In assuming the responsibility of the work assigned me in this department, it is my sole aim to observe a conservative rather than a coercive spirit in enforcing the law.

Cotton factories constitute the largest portion of work in this district. The length of time taken to carefully inspect large places must be taken into consideration rather than the number of inspections, some places requiring two or three days before completion.

In taking a retrospect of four years, there is no one thing that gives so much satisfaction as the decrease in number of children employed under sixteen years of age. The new law, which provides that no child under fourteen years shall be employed, met with little or no opposition in its enactment, as so few under that age were employed.

A few words in relation to chapter 150, section 1, which provides that suitable seats be provided for women employed in factories, etc. I find much objection to the seat that fastens on to the loom, as the operative, when seated, gets the continual jar or motion of the loom, which, to say the least, is decidedly unpleasant. I have in some cases been able to secure a different kind of seat after an explanation to the superintendent or agent, it remaining entirely with them, as it is a question whether such seats would be called suitable or not.

In relation to the particulars bill, the same being specially entrusted to me, I may be permitted to recall what I said last year in this connection. While manufacturers have practically complied, it has not the desired effect that prompted the framing of that law. Although I have numerous complaints, in only one case did I find the number of yards to exceed the maximum length intended. All warps already in the looms, having cuts portioned into the extra lengths, were paid extra for, it being the only satisfactory adjustment.

The improvement of the sanitary condition of factories has received the attention which the importance of the subject demands, and I have no hesitancy in saying that the sanitary condition of the large majority of manufacturing places in Bristol County can maintain a record that is second to none.

While there are many other duties incumbent on the inspector I mention specially the foregoing, the enforcement of the law per-

Digitized by Google

taining to hours of labor for women, guarding machinery, etc., being left, at your suggestion, to the regular inspector. The good results in factory inspection are in a measure due to the increasing confidence of employer in the inspector, and the hearty co-operation of all employers, acknowledging a unity of purpose on the part of all.

In closing this my seventh year of continuous service, I desire to state, as you already know, that this report covers only nine months of actual service, and I return my sincere thanks to you for your consideration for me at a time when I was unable to perform the duties of this office.

The following is a summary of work performed: —

Inspections in Fall River,	155
Inspections in New Bedford,	68
Inspections in Taunton,	27
Total number of inspections,	250
Orders,	90
Compliances,	90
Number of children between thirteen and fourteen,	3
Number of children between fourteen and sixteen,	1,951
Number of females employed,	18,512
Number of males employed,	18,952
Total number employed,	39,418

Digitized by Google

SPECIAL DUTY, ... MARY E HALLEY, *Inspectress.*

NAME OF FACTORY OR WORKSHOP.	Goods Manufactured.	Number Employed.				Sanitary Condition.	Orders Given.	Compliances.
		Males.	Females.	Under 14.	14 to 16.			
FALL RIVER.								
Linen Mills, Nos. 1, 2, 3, 4, .	Print cloth, . .	425	492	–	39	Good, .	Procure three school certificates; post specifications on warping on spooling frames.	Complied.
Shore Mills, Nos. 1, 2, . .	Print cloth, . .	220	298	–	21	Good, .	Post specifications in new weave room; designate closets in new room.	Complied.
Wampanoag Mills, Nos. 1, 2, .	Print cloth, . .	212	141	–	13	Good, .	Post weaving specifications, . .	Complied.
Slade Mills, ...	Print cloth, . .	275	300	–	27	Fair, .	Provide school certificate, . .	Complied.
Merchants Mill, No. 3, . .	Print cloth, . .	150	150	–	26	Good, .	Procure school certificate; post new prices on spooler frames.	Complied.
Cornell Mill, ...	Print cloth, . .	221	205	–	32	Good, .	Post prices on speeder frames, .	Complied.
Durfee Mills, Nos. 1, 2, 3, 4, .	Print cloth, . .	490	570	–	69	Good, .	Provide seats for women, . .	Complied.
Flint Mills, ...	Print cloth, . .	275	256	–	52	Good, .	Procure two school certificates; provide seats for women.	Complied.
Charlton & Co., ...	Mercantile, . .	3	25	–	5	Good, .	Procure school certificate, . .	Complied.
N. Y. Novelty Mfg. Co., . .	Fancy ware, . .	1	18	–	3	Good, .	Procure two school certificates, .	Complied.
Stafford Mill, No. 1, . . .	Print cloth, . .	204	203	–	21	Good, .	Place specifications in weaving department.	Complied.
Stafford Mill, No. 2, . . .	Print cloth, . .	319	151	–	16	Good, .	To clean closets, ...	Complied.
N. Y. Troy, Store, . . .	Mercantile, . .	30	130	–	20	Good, .	Provide school certificate, . .	Complied.
Shore Mills, Nos. 1, 2, . .	Print cloth, . .	327	275	–	43	Good, .	Provide school certificates, . .	Complied.

Digitized by Google

SPECIAL DUTY, MARY E. HALLEY, *Inspectress — Continued.*

NAME OF FACTORY OR WORKSHOP.	Goods Manufactured.	Number Employed.				Sanitary Condition.	Orders Given.	Compliances.
		Males.	Females.	Under 14.	14 to 16.			
FALL RIVER — *Concluded.*								
Esty Mill,	Twine, warp,	97	100	–	11	Good,	Send illiterate minors to evening school.	Complied.
Osborn Mills, Nos. 1, 2,	Print cloth,	400	360	–	35	Good,	Post new prices on all piece work, verbal order.	Complied.
Hargraves Mill, No. 2,	Fancy prints,	225	225	–	28	Good,	Send three illiterate minors to evening school; provide school certificate; post new prices.	Complied.
Merchants Mills, Nos. 1, 2,	Print cloth,	300	600	–	35	Good,	Place new prices on all piece work,	Complied.
Barnard Mill,	Print cloth,	290	270	–	71	Good,	Post prices on all piece work,	Complied.
R. Hindle,	Mercantile,	1	4	–	1	Good,	Discharge child twelve years of age,	Complied.
O. Corvireau,	Mercantile,	1	2	–	1	Good,	Procure one school certificate,	Complied.
Slade Mill,	Print cloth,	275	300	–	26	Fair,	Reserve separate closet for women, verbal order,	Complied.
Weetamoe Mills,	Print cloth,	219	166	–	31	Good,	Give prices to web drawers,	Complied.
Fall River Mfg Co.,	Print cloth,	175	205	–	30	Good,	Provide three school certificates,	Complied.
King Philip Mills, Nos. 1, 2, 3, 4,	Fancy prints,	510	540	–	52	Good,	Procure two school certificates,	Complied.
Davol Mill,	Fancy prints,	280	145	–	16	Good,	Post new prices on spooling and warping frames.	Complied.
Marshall Hat Co.,	Fur hats,	302	412	–	4	Good,	Post notice of hours of labor,	Complied.
R. B. Price,	Mercantile,	2	4	–	2	Fair,	Provide suitable and separate closet for women; provide two school certificates.	Complied.

Digitized by Google

Union Mills, Nos. 1, 2, 3, 4,	Print cloth,	451	492	–	64	Good,	Provide more seats for women in weaving department.	Complied.
Parker Mill,	Fancy print,	190	180	–	20	Good,	Provide school certificate,	Complied.
Narragansett Mill,	Print cloth,	220	320	–	44	Good,	Provide suitable seats in weave room; post prices on spooling and warping frames.	Complied.
Wampanoag Mills, Nos. 1, 2,	Print cloth,	510	450	–	80	–	Procure two school certificates; clean closets; post notice of hours of labor.	Complied.
Barnaby Mill,	Ginghams,	230	220	–	32	Good,	Procure one school certificate,	Complied.
Rufus Price,	Mercantile,	2	4	–	2	Good,	Designate closet; provide certificate.	Complied.
M. Haywood & Co.,	Twine, rope,	4	20	–	7	Good,	Provide seats for women; procure two school certificates.	Complied.
Shore Mills, Nos. 1, 2,	Print cloth,	360	300	–	39	Good,	Procure two school certificates,	Complied.
Quinn Woodlan,	Mercantile,	4	9	–	4	Good,	Procure school certificate,	Complied.
Globe Yarn Mills, Nos. 1 and 2,	Fine yarn,	301	361	–	54	Good,	Post notice of hours of labor; procure school certificate.	Complied.
Tecumseh Mills,	Print cloth,	225	270	–	30	Good,	Post prices on all piece work; provide more seats for women.	Complied.
Laurel Lake Mills,	Print cloth,	250	325	–	48	Good,	Procure five school certificates; post prices on all piece work.	–
Fall River Bleachery,	Bleachery,	225	56	1	11	Good,	Procure four school certificates,	Complied.
Stevens' Mill,	Counterpanes,	197	55	–	7	Good,	Procure school certificate,	Complied.
Granite Mills, Nos. 1, 2 and 3,	Print cloth,	453	501	–	60	Good,	Reduce number of yards on one style of goods.	Complied.
Pocasset Hat Co.,	Fur hats,	41	19	–	2	Good,	Provide two school certificates; keep closets clean.	Complied.
Nordell, McGuire & Dillon,	Mercantile,	37	30	–	2	Good,	Procure school certificate,	Complied.

Digitized by Google

SPECIAL DUTY, MARY E. HALLEY, *Inspectress — Concluded.*

NAME OF FACTORY OR WORKSHOP.	Goods Manufactured.	Number Employed.				Sanitary Condition.	Orders Given.	Compliances.
		Males.	Females.	Under 14.	14 to 16.			
TAUNTON.								
Whittendon Mills,	Dress goods,	594	564	–	55	Good,	Place partition between men's and women's closets in lower weave room; designate closets; procure school certificates.	Complied.
Reed & Barton,	Silver ware,	423	56	–	2	Good,	Post notice of hours of labor in one room.	Complied.
Corr Mill,	–	225	275	–	26	Good,	Post prices on spooler frames,	Complied.
Elizabeth Poole Mill,	Fancy cloth,	120	140	–	13	Good,	Change specifications to comply with "Particulars bill"; procure school certificate.	Complied.
L. B. Cleasby,	Mercantile,	4	5	–	1	Good,	Procure certificate,	Complied.
Atlas Tack Factory,	Tacks,	350	120	–	2	Good,	Post notice of hours of labor; procure certificate.	Complied.
O. N. Brown,	Mercantile,	3	7	–	1	Good,	Procure certificate,	Complied.
Boston Store,	Mercantile,	3	6	–	1	Good,	Procure certificate,	Complied.
NEW BEDFORD.								
Howland Mills,	Fine yarn,	142	118	–	22	Good,	Procure one school certificate,	Complied.
Westport Factory, Nos. 1 and 2,	Twine,	83	81	–	18	Good,	Designate closets,	Complied.
Bennett Mills, Nos. 1, 2, 3 and 4,	Yarn,	444	550	1	94	Good,	Provide three school certificates,	Complied.
New Bedford Spinning Co.,	Yarn,	150	200	–	22	Good,	Provide school certificates,	Complied.

Digitized by Google

Blackmer Cut Glass Co.,	Cut glass,	18	2	–	1	–	Post notice of hours of labor; procure school certificate.	Complied.
National Biscuit Co.,	Fancy crackers,	82	25	–	3	Good,	Post notice of hours of labor; procure school certificate.	Complied.
Wamsutta Mills, Nos. 1 to 7,	Print cloth,	1150	950	–	135	Good,	Provide seats in mills Nos. 1, 2 and 3; procure two school certificates.	Complied.
A. H. Carpenter,	Mercantile,	2	2	–	1	Good,	Procure certificate,	Complied.
Pierce Mill,	Fancy prints,	220	300	–	24	Good,	Post prices on all piece work,	–
Grinnell Mills, Nos. 1 to 4,	Fancy prints,	350	540	–	36	Good,	Post prices on twisters' work,	Complied.
Chas. Wing & Co.,	Fancy wares,	30	12	–	1	Good,	Designate closets,	Complied.
Potomski Mills, Nos. 1 and 2,	Print cloth,	581	490	–	48	Good,	Post prices on twisters' work,	Complied.
Acushnet Mills, Nos. 1 and 2,	Fancy prints,	657	478	–	49	Good,	Post prices on twisters' work,	Complied.
Knowles & Co.,	Mercantile,	7	9	–	2	Good,	Procure certificate,	Complied.
J. V. Spare,	Mercantile,	8	17	–	1	Good,	Procure certificate,	Complied.

Digitized by Google

REPORT OF INSPECTRESS MARY A. NASON.

SIR: — I herewith respectfully submit my first tabulated report as inspectress.

While my work has been to a great extent among the mercantile, millinery and dressmaking establishments, I have also inspected many manufacturing plants. It has been a source of gratification to me to find such general recognition of the laws pertaining to the welfare and comfort of the workers, and the kindly feeling that in most cases exists between employers and employees.

There are some conditions, however, that are far from ideal, and that I would like to see carried to a much greater degree of perfection, one of which is the arrangement of the toilet closets in places where both sexes are employed, so that stricter privacy might be insured, especially where there are young people; also, a rigid enforcement of habits of cleanliness among employees, which are as essential in our places of business as in our homes, and should be as closely observed.

I have found, as a rule, very little inclination to overstep the limit of the law in regard to the hours of labor. There being no law limiting the hours of female adults in mercantile establishments, we find the hours very long; especially is this true in the smaller towns. In very many of these cases this condition of affairs might be obviated, for it seems that many of the merchants themselves desire it, but the fact that the few will not agree to a change compels its continuance.

It seems to me that the tendency to employing children under sixteen years of age is decreasing, and will be greatly augmented by the new law that went into effect the first of last September. Many employers have expressed the opinion that it was too much trouble to look after certificates, etc. The new law necessitates a greater expenditure of time and energy, hence my belief in its efficacy to decrease the employment of such children.

The fact that I have had to issue but four orders for seats for women proves that this most humane measure has become a well-established custom.

It gives me pleasure to state, in conclusion, that I have been treated with uniform courtesy and respect, and that I have found the people with whom I have had to deal in my relations as inspectress ready and willing, as a rule, to meet all the requirements of the laws.

Digitized by Google

Summary.

Number of inspections,	705
Orders issued,	408
Number of compliances,	406
Children under fourteen employed,	21
Children between fourteen and sixteen employed,	1,037
Males (adults) employed,	15,396
Females (adults) employed,	21,988

Number of Inspections.

Boston,	322	Leominster,	4
Cambridge,	17	Natick,	3
Fitchburg,	17	Salem,	36
Haverhill,	45	Springfield,	24
Holyoke,	20	Worcester,	49
Lawrence,	54	Woburn,	9
Lynn,	71	Waltham,	16
Lowell,	17	Watertown,	1

Digitized by Google

SPECIAL DUTY, ... MARY A. NASON, *Inspectress.*

NAME OF FACTORY OR WORKSHOP.	Goods Manufactured.	Number Employed.				Sanitary Condition.	Orders Given.	Compliances.
		Males.	Females.	Under 14.	14 to 16.			
BOSTON.								
T. Frank Bell, ...	Mercantile, . .	7	8	–	1	Good, .	Procure certificate, ...	Complied.
Lowando, ...	Mercantile, . .	8	9	–	–	Good, .	Designate closet, ...	Complied.
Geo. M. Worthen, . . .	Mercantile, . .	4	96	–	–	Good, .	Designate closet, ...	Complied.
M. M. Ransom, ...	Mercantile, . .	1	6	–	1	Good, .	Provide separate closet, . . .	Complied.
W. P. Bigelow & Co., . .	Mercantile, . .	1	18	–	–	Good, .	Designate closet, ...	Complied.
Raymond Syndicate, . . .	Mercantile, . .	37	35	–	5	Good, .	Designate closet, ...	Complied.
J. Littaner, ...	Mercantile, . .	3	2	–	–	Fair, .	Give women designated closet, .	Complied.
Henry Kray & Co., . . .	Mercantile, . .	8	33	–	14	Good, .	Get two certificates; additional seats; designate closet.	Complied.
Walter M. Lowney & Co., . .	Confectionery, .	120	180	–	21	Good, .	Get certificates, ...	Complied.
Thos. O'Callaghan, . . .	Mercantile, . .	120	30	–	–	Good, .	Designate closet, ...	Complied.
F. W. Woolworth & Co., . .	Mercantile, . .	13	69	–	–	Good, .	Designate closet, ...	Complied.
Richard Schwarz, . . .	Mercantile, . .	6	12	–	1	Fine, .	Get certificate, ...	Complied.
Lyman, Gibbs & Co., . . .	Mercantile, . .	16	9	–	1	Good, .	Get certificate, ...	Complied.
Martin Duffy, ...	Restaurant, . .	2	2	–	–	Fair, .	Designate closet, ...	Complied.
T. McClure, ...	Millinery, . .	1	2	–	–	Good, .	Give women designated closet, .	Complied.
F. H. Smith, ...	Paper bags, . .	7	1	–	2	Good, .	Get certificates, ...	Complied.
Hersey, Damon & Sprague, .	Slippers, . .	30	20	–	–	Good, .	Designate closet, ...	Complied.
Coburn & Whitman, . . .	Overalls, . .	15	35	–	1	Good, .	Get certificate; designate closet, .	Complied.
M. Rosenfeld, ...	Wrappers, . .	15	35	–	1	Good, .	Designate closet, ...	Complied.
L K. Brigham, ...	Skirts, . . .	3	37	–	–	Good, .	Designate closet, ...	Complied.
Russ, Eveleth & Ingalls, . .	Women's wear, .	10	200	–	–	Fine, .	Designate closets, ...	Complied.

Digitized by Google

Morse Pelonsky,	Cloaks,	5	35	1	–	Good,	Designate closet,	Complied.
Sterling Glove Co.,	Gloves,	10	25	–	1	Good,	Get certificate; provide additional closet.	Complied.
Wheeler, Howe & Lovejoy,	Wrappers,	14	65	–	–	Fine,	Designate closets,	Complied.
W. H. Conant & Co.,	Mackintoshes,	25	100	–	1	Good,	Get certificate,	Complied.
Columbia Rubber Co.,	Rubber,	25	75	–	1	Fair,	Get certificate,	Complied.
Holmes & Kimball,	Leather,	15	25	–	–	Good,	Designate closet,	Complied.
Rhodes & Ripley,	Clothing,	29	6	–	–	Good,	Designate closet,	Complied.
Smith Made Suspender Co.,	Suspenders,	20	30	–	1	Good,	Designate closet; get certificate,	Complied.
F. A. Horle,	Paper boxes,	4	12	–	–	Good,	Designate closet,	Complied.
F. S. Clarke & Co.,	Shoes,	12	8	–	–	Fair,	Designate closet,	Complied.
S. F. Owen & Co.,	Wrappers,	1	35	–	–	Good,	Designate closet,	Complied.
C. A. Folsom,	Candy,	3	3	–	–	Fair,	Provide additional closet and designate same.	Complied.
C. H. Best,	Mercantile,	3	2	–	–	Good,	Provide additional closet and designate same.	Complied.
Boyle Bros.,	Mercantile,	20	15	–	–	Good,	Designate closet,	Complied.
Thos. F. Galvin,	Mercantile,	15	2	–	2	Good,	Get two certificates,	Complied.
Ipswich Mills,	Hosiery,	10	240	–	44	Good,	Get four certificates,	Complied.
Timothy Smith & Co,	Mercantile,	26	65	2	2	Good,	Dismiss two boys illegally employed; designate closet.	Complied.
Shay Bros.,	Mercantile,	2	4	–	–	Good,	Provide separate closet and designate same.	Complied.
Hunt Bros.,	Mercantile,	18	35	–	1	Good,	Get certificate,	Complied.
M. E. DeLaurier,	Dresses,	–	10	–	–	Good,	Post time table,	Complied.
M. S. Wernet,	Dresses,	–	6	–	–	Good,	Post time table,	Complied.
John Cech,	Dresses,	–	5	–	–	Good,	Post time table,	Complied.
O. J. Oliver,	Dresses,	2	10	–	–	Good,	Post time table,	Complied.
S. A. Violette,	Dresses,	–	2	–	–	Good,	Post time table,	–
S. E. Way,	Millinery,	–	6	–	–	Good,	Post time table,	Complied.
A. H. Rice,	Dresses,	–	6	–	–	Good,	Post time table,	Complied.

Digitized by Google

SPECIAL DUTY, MARY A. NASON, *Inspectress — Continued.*

NAME OF FACTORY OR WORKSHOP.	Goods Manufactured.	Number Employed.				Sanitary Condition.	Orders Given.	Compliances.
		Males.	Females.	Under 14.	14 to 16.			
BOSTON — *Continued.*								
A. Gallaher,	Dresses,	1	5	–	–	Good,	Post time table,	Complied.
D. F. Kane,	Dresses,	–	4	–	–	Good,	Post time table,	Complied.
I. Nadell,	Dresses,	5	4	–	–	Good,	Post time table,	Complied.
Mlle. Caroline,	Millinery,	1	6	–	–	Good,	Post time table,	Complied.
C. H. Giterman,	Dresses,	8	8	–	–	Good,	Post time table,	Complied.
M. Cohn,	Dresses,	3	2	–	–	Good,	Post time table,	Complied.
A. M. & L. M. Ebbitt,	Dresses,	2	33	–	–	Good,	Post time table,	Complied.
Paine & Payrow,	Dresses,	–	6	–	–	Good,	Post time table,	Complied.
Mrs. Geo. E. Taylor,	Millinery,	1	5	–	1	Good,	Post time table,	Complied.
Mlle. Amyrault,	Dresses,	–	10	–	–	Good,	Post time table,	Complied.
L. T. Colby,	Dresses,	–	8	–	–	Good,	Post time table,	Complied.
Madam Ellen Drew,	Dresses,	–	10	–	–	Good,	Post time table,	Complied.
R. A. McCormick,	Dresses,	1	24	–	–	Good,	Post time table,	Complied.
Madam Elise,	Dresses,	–	15	–	–	Good,	Post time table,	Complied.
S. Bider,	Dresses,	1	2	–	–	Good,	Post time table,	Complied.
Billa Landry,	Dresses,	–	9	–	–	Good,	Post time table,	Complied.
M. Saxon,	Dresses,	–	3	–	–	Good,	Post time table,	Complied.
J. D. McKenney,	Dresses,	–	12	–	–	Good,	Post time table,	Complied.
F. I. Noyes,	Dresses,	–	12	–	–	Good,	Post time table,	Complied.
M. C. Hanson,	Dresses,	–	6	–	–	Good,	Post time table,	Complied.
E. V. Crocker,	Millinery,	–	2	–	–	Good,	Post time table,	Complied.
Madam Louise,	Dresses,	–	12	–	–	Good,	Post time table,	Complied.

Digitized by Google

Wm. C. Safford,	Upholstery,	4	3	–	–	Good,	Post time table,	Complied.
L. B. Wood,	Dresses,	–	3	–	–	Good,	Post time table,	Complied.
Tileston Bros. Shoe Co.,	Shoes,	60	20	–	2	Poor,	Two certificates; clean closet,	Complied.
A. E. Parsons,	Dresses,	2	8	–	1	Good,	Post time table; get certificate; separate closets.	Complied.
S. Weiscopf,	Dresses,	–	15	–	1	Good,	Post time table; get certificate,	Complied.
Mrs. W. B. Crocker,	Millinery,	–	6	–	–	Good,	Post time table,	Complied.
A. R. Henry,	Dresses,	1	49	–	–	Good,	Post time table,	Complied.
T. Dowling,	Dresses,	–	45	–	–	Good,	Post time table,	Complied.
Celia Costello,	Millinery,	–	2	–	–	Good,	Post time table,	Complied.
A. M. Knight,	Millinery,	–	12	–	–	Good,	Post time table,	Complied.
Hurwitch Bros.,	Dresses,	4	2	–	–	Good,	Post time table,	Complied.
W. H. Upham,	Book bindery,	4	36	–	2	Fair,	Get two certificates,	Complied.
L. A. Litchfield,	Dresses,	–	8	–	–	Good,	Post time table,	Complied.
W. S. Wilcox,	Dresses,	–	3	–	–	Good,	Post time table,	Complied.
J. E. Croft,	Dresses,	–	5	–	–	Good,	Post time table,	Complied.
A. M. Nicholson,	Dresses,	–	15	–	–	Good,	Post time table,	Complied.
Mrs. McHenry,	Dresses,	–	5	–	–	Good,	Post time table,	Complied.
W. S. Ryder,	Dresses,	–	8	–	–	Good,	Post time table; designate closet,	Complied.
J. E. Hattie,	Dresses,	–	8	–	–	Good,	Post time table,	Complied.
M. A. Boyd,	Dresses,	–	10	–	–	Good,	Post time table,	Complied.
F. M. Holland,	Dresses,	–	12	–	–	Good,	Post time table,	Complied.
Fontaine Fay,	Millinery,	–	4	–	–	Good,	Post time table,	Complied.
Celeste,	Millinery,	1	12	–	–	Good,	Post time table,	Complied.
W. C. Keen,	Millinery,	1	13	–	–	Good,	Post time table,	Complied.
M. McGrath,	Dresses,	–	15	–	–	Good,	Post time table,	Complied.
L. G. McIntosh,	Ladies' goods,	3	12	–	–	Good,	Post time table,	Complied.
A. J. Tower,	Oil clothing,	25	135	–	1	Good,	Get certificate,	Complied.
W. S. Barnes,	Boxes,	12	84	–	1	Good,	Get certificate,	Complied.
Carter's Ink Co.,	Ink,	22	28	–	–	Good,	Post time tables,	Complied.
McDonnell & Louden,	Dresses,	–	2	–	–	Good,	Post time table,	Complied.

Digitized by Google

SPECIAL DUTY, MARY A. NASON, *Inspectress — Continued.*

NAME OF FACTORY OR WORKSHOP.	Goods Manufactured.	Number Employed.				Sanitary Condition.	Orders Given.	Compliances.
		Males.	Females.	Under 14.	14 to 16.			
BOSTON — *Continued.*								
Stowell & Rose,	Dresses,	–	6	–	–	Good,	Post time table,	Complied.
Miner, Beal & Co.,	Men's clothing,	85	15	–	–	Good,	Post time table,	Complied.
J. C. McIntire & Co.,	Storm clothing,	3	27	–	–	Good,	Post time table; designate closet,	Complied.
Slutzky & Cohen,	Overalls,	8	17	–	–	Poor,	Clean closets,	Complied.
Mills, Knight & Co.,	Printing,	51	47	–	2	Good,	Get two certificates,	Complied.
Clifton Mfg. Co.,	Mackintoshes,	8	72	–	–	Good,	Post time tables,	Complied.
W. S. Schrafft & Sons,	Candy,	25	75	–	19	Fair,	Get two certificates,	Complied.
J. C. Pushee & Sons,	Brushes,	75	100	–	8	Good,	Clean closets; get two certificates,	Complied.
T. G. Plant & Co.,	Shoes,	685	515	–	45	Good,	Post time tables; get twenty-three certificates.	Complied.
W. M. Baker,	Bon bons,	19	106	–	9	Good,	Get five certificates,	Complied.
Jameson & Son,	Straw hats,	22	110	–	1	Good,	Get one certificate,	Complied.
Thos. C. Newell & Co.,	Leather novelties,	3	9	–	–	Good,	Post time table,	Complied.
R. H. Stearns & Co.,	Mercantile,	95	109	–	4	Good,	Get one certificate,	Complied.
W. S. Butler & Co.,	Millinery,	–	35	–	–	Good,	Post time table,	Complied.
W. S. Butler & Co.,	Mercantile,	70	180	–	15	Good,	Get one certificate,	Complied.
Houghton & Dutton,	Mercantile,	234	466	–	32	–*	Get four certificates,	Complied.
Gross & Strauss,	Mercantile,	15	135	–	1	Good,	Get one certificate,	Complied.
Jane Magee,	Dresses,	1	7	–	–	Good,	Post time table,	Complied.
Mde. Varot,	Millinery,	–	5	–	–	Good,	Post time table,	Complied.
Sam'l Alexander,	Clothing,	20	15	–	1	Fair,	Get one certificate,	Complied.
Lehrberger & Asher,	Furs,	30	20	–	–	Poor,	Clean men's closet,	Complied.

Digitized by Google

J. J. Grace,	Millinery,	2	28	–	1	Good,	Post time table; get one certificate,	Complied.
E. F. Sinnott,	Dresses,	–	9	–	–	Good,	Post time table,	Complied.
Mrs F. H. Pierce,	Dresses,	–	30	–	–	Good,	Post time table,	Complied.
Chandler & Co.,	Mercantile,	56	57	–	6	Good,	Get two certificates,	Complied.
Shepard, Norwell & Co.,	Mercantile,	275	185	–	43	Good,	Get nine certificates,	Complied.
W. Paris,	Dresses,	3	2	–	–	Fair,	Post time table; designate closets,	Complied.
S. Paolucci,	Dresses,	5	5	–	–	Good,	Provide additional closet and designate same.	Complied.
A. O. Chartier,	Dresses,	–	23	–	–	Good,	Post time table,	Complied.
T. Y. Crowell & Co.,	Book bindery,	85	90	–	–	Good,	Designate closets,	Complied.
S. Howard,	Millinery,	1	16	–	–	Good,	Post time table,	Complied.
M E. McQuade,	Millinery,	1	16	–	–	Good,	Post time table,	Complied.
Mrs. H. P. Gamble,	Dresses,	–	11	–	1	Good,	Post time table; get one certificate,	Complied.
S. A. Finley,	Dresses,	–	6	–	–	Good,	Post time table,	Complied.
Perkins & Stanton,	Dresses,	–	2	–	–	Good,	Post time table,	Complied.
Mrs. Stewart Farnsworth,	Dresses,	–	10	–	–	Good,	Post time table,	Complied.
N. L. Galerneaux,	Corsets,	–	9	–	–	Good,	Post time table,	Complied.
A. C. Clark,	Dresses,	–	10	–	–	Good,	Post time table,	Complied.
E. Crue,	Dresses,	–	4	–	–	Good,	Post time table,	Complied.
L. Sumner,	Dresses,	2	4	–	–	Good,	Post time table; designate closet,	Complied.
Miss Sylvester,	Millinery,	–	6	–	–	Good,	Provide closet,	Complied.
K. F. Teahan,	Dresses,	–	8	–	–	Good,	Post time table,	Complied.
A. Modis & Co,	Millinery,	–	5	–	–	Good,	Post time table,	Complied.
C. Peake,	Dresses,	–	2	–	–	Good,	Post time table,	Complied.
Mary Connell,	Dresses,	–	9	–	–	Good,	Post time table,	Complied.
S. A. Bailey,	Dresses,	–	10	–	–	Good,	Post time table,	Complied.
E. S. Raynes,	Dresses,	–	6	–	–	Good,	Post time table,	Complied.
N. F. Sheehan,	Dresses,	–	6	–	1	Good,	Post time table; get certificate,	Complied.
J. M. Bergstrom,	Millinery,	–	2	–	–	Good,	Post time table,	Complied.

* Excellent.

Digitized by Google

SPECIAL DUTY, MARY A. NASON, *Inspectress — Continued.*

NAME OF FACTORY OR WORKSHOP.	Goods Manufactured.	Number Employed.				Sanitary Condition.	Orders Given.	Compliances.
		Males.	Females.	Under 14.	14 to 16.			
BOSTON — *Continued.*								
H. Rochette,	Dresses,	–	3	–	–	Good,	Post time table,	Complied.
C H. Hollis & Co.,	Embroidery,	1	4	–	–	Good,	Post time table,	Complied.
M V Gill,	Dresses,	–	12	–	–	Good,	Post time table,	Complied.
E E. Chapman,	Dresses,	1	33	–	1	Good,	Post time table; get certificate,	Complied.
G. F. Badger,	Dresses,	–	3	–	–	Good,	Post time table,	Complied.
H. B. Robinson,	Dresses,	–	4	–	–	Good,	Post time table,	Complied.
Mary E. Kain,	Dresses,	–	4	–	–	Good,	Post time table,	Complied.
M Sexton,	Dresses,	–	3	–	–	Good,	Post time table,	Complied.
S. A. Swift,	Dresses,	–	2	–	–	Good,	Post time table,	Complied.
Mrs. Higgins,	Corsets,	–	3	–	–	Good,	Post time table,	Complied.
J. E. Loker,	Dresses,	–	6	–	–	Good,	Post time table,	Complied.
A. A. Poole,	Dresses,	–	3	–	–	Good,	Post time table,	Complied.
Mrs. Learmonth,	Dresses,	–	2	–	–	Good,	Post time table,	Complied.
G. E. Sederquest,	Dresses,	–	3	–	–	Good,	Post time table,	Complied.
Eda Harberg,	Dresses,	–	2	–	–	Good,	Post time table,	Complied.
Joseph Addstein,	Dresses,	4	2	–	–	Good,	Post time table,	Complied.
M. E. Hall,	Waists,	1	6	–	–	Good,	Post time table,	Complied.
K. M. Covell,	Dresses,	–	4	–	–	Good,	Post time table,	Complied.
Frances Hubley,	Dresses,	–	9	–	–	Good,	Post time table,	Complied.
S. P. Howard,	Dresses,	–	4	–	–	Good,	Post time table,	Complied.
C. F. Hovey & Co.,	Dresses,	5	76	–	–	Good,	Post time table,	Complied.
M. O. Flint,	Dresses,	–	5	–	–	Good,	Post time table,	Complied.

Digitized by Google

Ladies' Coat and Suit House,	Coats and suits,	–	18	–	–	Good,	Post time table,	Complied.
A. Shuman & Co,	Mercantile,	118	29	–	7	Good,	Get five certificates,	Complied.
A. Shuman & Co.,	Dresses,	49	74	–	–	Good,	Post time tables,	Complied.
Mrs Treen,	Dresses,	–	2	–	–	Good,	Post time table,	Complied.
I. H. Gallagher,	Millinery,	–	4	–	–	Good,	Post time table,	Complied.
O A. & M. J. Welsh,	Millinery,	–	2	–	–	Good.	Post time table,	Complied.
M. A. Bailey,	Millinery,	–	4	–	–	Good,	Post time table,	Complied.
Albert Aldrich,	Millinery,	1	14	–	–	Good,	Post time table,	Complied.
A. M. Waite,	Dresses,	–	6	–	–	Good,	Post time table,	Complied.
L. A. Healey,	Dresses,	–	13	–	–	Good,	Post time table,	Complied.
E. I. Neary,	Millinery,	–	2	–	–	Good,	Post time table,	Complied.
L. H. Melville,	Millinery,	1	14	–	–	Good,	Post time table,	Complied.
B. A. Johnson,	Dresses,	–	10	–	–	Good,	Post time table,	Complied.
H. S. Brown & Co.,	Dresses and millinery.	1	6	–	–	Good,	Post time table,	Complied.
L. D. Walker,	Millinery,	2	13	–	–	Good,	Post time table,	Complied.
J. F. Burns,	Dresses,	–	10	–	–	Good,	Post time table,	Complied.
S. Alland & Bros,	Millinery,	–	7	–	–	Good,	Post time table,	Complied.
J. W. Roberts,	Confectionery,	2	4	–	–	Good,	Provide seats and closet within reasonable access.	Complied.
Cushing Process Co,	Purifying liquors,	10	4	–	–	Good,	Post time table,	Complied.
J. A. Barry,	Millinery,	1	9	–	–	Good,	Post time table,	Complied.
E. J. Hartnett,	Millinery,	–	8	–	–	Good,	Post time table,	Complied.
M. J. McFadden,	Millinery,	–	12	–	–	Good,	Post time table,	Complied.
Stitching and Plaiting Co.,	Stitching and plaiting.	–	7	–	–	Good,	Post time table,	Complied.
M. B. Cushman,	Millinery,	–	4	–	–	Good,	Post time table,	Complied.
M. J. McCarthy,	Dresses,	–	6	–	–	Good,	Post time table,	Complied.
I. D. Given,	Millinery,	–	3	–	–	Good,	Post time table,	Complied.
M. E. Cobb,	Millinery,	–	5	–	–	Good,	Post time table,	Complied.
M. E. Ford,	Millinery,	–	4	–	–	Good,	Post time table,	Complied.

Digitized by Google

SPECIAL DUTY, MARY A. NASON, *Inspectress — Continued.*

NAME OF FACTORY OR WORKSHOP.	Goods Manufactured.	Number Employed.				Sanitary Condition.	Orders Given.	Compliances.
		Males.	Females.	Under 14.	14 to 16.			
BOSTON — *Concluded.*								
M. Fitton,	Millinery,	–	5	–	–	Good,	Post time table,	Complied.
F. L. Thomas,	Corsets and dresses,	–	3	–	–	Good,	Post time table,	Complied.
J. Barrett,	Dresses,	–	7	–	–	Good,	Post time table,	Complied.
CAMBRIDGE.								
Chas. B. Wilber,	Mercantile,	1	3	–	1	Good,	Provide seats and one certificate,	Complied.
J. T. Webster,	Mercantile,	1	2	–	–	Good,	Provide seats,	Complied.
D. W. Hyde & Co.,	Mercantile,	3	2	–	–	Fair,	Provide additional closet,	Complied.
W. T. Rook & Co.,	Mercantile,	3	3	–	–	Good,	Provide additional closet,	Complied.
National Biscuit Co.,	Fancy crackers,	300	300	–	9	Good,	Provide additional seats,	Complied.
A. J. Barnard,	Millinery,	1	9	–	–	Good,	Post time table,	Complied.
W. T. Warren,	Confectionery,	4	4	–	–	Good,	Provide additional closet,	–*
FITCHBURG.								
Davis & O'Brien,	Millinery,	–	4	–	–	Good,	Post time table,	Complied.
Mde. Geoffrion,	Millinery,	–	8	–	–	Good,	Post time table,	Sold out.
S. V Girard,	Millinery,	–	5	–	–	Good,	Post time table,	Complied.
Nichols & Frost,	Dresses,	–	11	–	–	Good,	Post time table,	Complied.
Nichols & Frost,	Millinery,	–	3	–	–	Good,	Post time table,	Complied.
Felulah Paper Co.,	Paper,	141	40	2	10	Good,	Get four certificates,	Complied.
Fitchburg Worsted Co.,	Worsted goods,	125	225	2	22	Good,	Post time table,	Complied.

Digitized by Google

HAVERHILL.								
E. E Graves,	Millinery,	-	7	-	-	Good,	Post time table,	Complied.
J. B. Smith,	Millinery,	-	4	-	-	Good,	Post time table,	Complied.
Simonds & Adams,	Millinery,	-	5	-	-	Good,	Post time table,	Complied.
C. N. Rhodes,	Millinery,	-	3	-	-	Good,	Post time table,	Complied.
Geo. O. Willey & Co.,	Millinery,	-	9	-	-	Good,	Post time table,	Complied.
N. H. Bonney,	Millinery,	-	4	-	-	Good,	Post time table,	Complied.
E. M. Tapley,	Millinery,	-	5	-	-	Good,	Post time table,	Complied.
R. A. Keene,	Millinery,	-	2	-	-	Good,	Post time table,	Complied.
E. G. Patten,	Millinery,	-	4	-	-	Good,	Post time table,	Complied.
A. E. Hatch,	Millinery,	-	5	-	-	Good,	Post time table,	Complied.
O. G. Courteau,	Millinery,	-	5	-	-	Good,	Post time table,	Complied.
V. E. Williams,	Millinery,	-	3	-	-	Good,	Post time table,	Complied.
J. H. Winchell & Co.,	Shoes,	619	300	-	27	Fair,	Clean closets; get two certificates,	Complied.
Perley Weeks,	Shoes,	143	109	-	-	Good,	Post time tables,	Complied.
L. M. Perkins,	Dresses,	-	4	-	-	Good,	Post time table,	Complied.
Waterman & Wiggin,	Dresses,	-	5	-	-	Good,	Post time table,	Complied.
M. B. Hersey,	Dresses,	-	3	-	1	Good,	Post time table; get one certificate,	Complied.
N. A. Gore,	Millinery,	-	6	-	-	Good,	Post time table,	Complied.
L. A. Crockett,	Dresses,	-	4	-	-	Fair,	Post time table; furnish separate closet.	Complied.
Hanson & McNeal,	Dresses,	-	3	-	-	Good,	Post time table,	Complied.
I. Lea,	Shirts,	-	4	-	-	Good,	Post time table,	Complied.
A. H. Munday,	Dresses,	-	2	-	-	Good,	Post time table,	Complied.
Joy & Savary,	Dresses,	-	3	-	-	Good,	Post time table,	Complied.
O. A. Drew,	Fur garments,	-	2	-	-	Good,	Post time table,	Complied.
M. G. Clay,	Millinery,	-	3	-	-	Good,	Post time table,	Complied.
M. E. Malloy,	Millinery,	-	3	-	-	Good,	Post time table,	Complied.
W. F. Thayer,	Dresses,	-	2	-	-	Good,	Post time table,	Complied.

* Recent order.

Digitized by Google

SPECIAL DUTY, MARY A. NASON, *Inspectress — Continued.*

NAME OF FACTORY OR WORKSHOP.	Goods Manufactured.	Number Employed.				Sanitary Condition.	Orders Given.	Compliances.
		Males.	Females.	Under 14.	14 to 16.			
HAVERHILL — *Concluded.*								
A. H. Hodgdon,	Laundry,	3	9	–	–	Bad,	Provide closets; post time table,	Complied.
Proctor & Brooks,	Laundry,	5	6	–	–	Good,	Provide additional closet,	Complied.
HOLYOKE.								
E. M. Lindsay,	Millinery,	–	8	–	–	Good,	Post time table,	Complied.
H. Houle,	Millinery,	–	6	–	–	Good,	Post time table,	Complied.
S. Davis & Sons,	Mercantile,	1	5	–	–	Good,	Provide additional closet,	–*
P. N. Ganthier,	Dresses,	–	9	–	–	Good,	Post time table,	Complied.
Dickieson & Co.,	Millinery,	–	5	–	–	Good,	Post time table,	Complied.
A. Steiger & Co.,	Millinery,	–	10	–	–	Good,	Post time table,	Complied.
H. W. Atherton,	Millinery,	–	8	–	–	Good,	Post time table,	Complied.
Forbes & McDonald,	Mercantile,	4	11	–	–	Good,	Provide additional closet,	Complied.
N. T. Healy,	Millinery,	–	12	–	–	Good,	Post time table,	Complied.
The Misses Curran,	Millinery,	–	2	–	–	Good,	Post time table,	Complied.
J. J. Curran,	Millinery,	–	5	–	–	Good,	Post time table,	Complied.
LAWRENCE.								
Kate T. Alexander,	Dresses and millinery.	–	7	–	–	Good,	Post time table,	Complied.
J. T. Lowney,	Millinery,	–	3	–	–	Good,	Post time table,	Complied.
Sarah MacKeown,	Millinery,	–	7	–	–	Good,	Post time table,	Complied.
Susan M. Upton,	Dresses,	–	7	–	–	Good,	Post time table,	Complied.

Digitized by Google

R. G. Lear,	Dresses,	–	10	–	–	Good,	Post time table,	Complied.
N. L. Wakefield,	Millinery,	–	5	–	–	Good,	Post time table,	Complied.
Annie Dawson,	Dresses,	–	4	–	–	Good,	Post time table,	Complied.
M. F. Hogan,	Millinery,	–	5	–	–	Good,	Post time table,	Complied.
M. E. Fletcher,	Millinery,	1	3	–	–	Good,	Post time table,	–
M. J Cahill,	Dresses,	–	3	–	–	Good,	Post time table,	Complied.
S. M. McCormick,	Millinery,	–	2	–	–	Good,	Post time table,	Complied.
N. Greenhalge,	Dresses,	–	5	–	–	Good,	Post time table,	Complied.
John T. Golden,	Millinery,	–	6	–	–	Good,	Post time table,	Complied.
Sharon Bros.,	Millinery,	–	2	–	–	Good,	Post time table,	Complied.
A. M. Chalmers,	Dresses,	–	3	–	–	Good,	Post time table,	Complied.
M. A. Seddon,	Millinery,	–	2	–	–	Good,	Post time table,	Complied.
A. C. Crowell,	Millinery,	–	4	–	–	Good,	Post time table,	Complied.
Reid & Hughes,	Millinery,	–	6	–	–	Good,	Post time table,	Complied.
C. E. Richardson & Co.,	Millinery,	–	7	–	–	Good,	Post time table,	Complied.
M. A. Keys,	Millinery,	–	5	–	–	Good,	Post time table,	Sold out.
A. A. Spofford & Co,	Mercantile,	2	2	–	–	Good,	Provide additional closet and designate same.	Complied.
E. Robinson,	Dresses and millinery.	–	3	–	–	Good,	Post time table,	Complied.
L. C. Moore & Co.,	Millinery,	–	3	–	–	Good,	Post time table,	Complied.
B. Wefers,	Millinery,	–	8	–	–	Good,	Post time table,	Complied.
M. J. Mortimer,	Millinery,	–	4	–	–	Good,	Post time table,	Complied.
Mrs. Martin Burns,	Millinery,	–	3	–	–	Good,	Post time table,	Complied.
M. Emus,	Dresses,	–	5	–	–	Good,	Post time table,	Complied.
Lizzie Donahue,	Dresses,	–	3	–	–	Good,	Post time table,	Complied.
H. F. Brassill,	Dresses,	–	3	–	–	Good,	Post time table,	Complied.
M. G. Hayes,	Dresses,	–	2	–	–	Good,	Post time table,	Complied.

* Recent order.

Digitized by Google

SPECIAL DUTY, MARY A. NASON, *Inspectress — Continued.*

NAME OF FACTORY OR WORKSHOP.	Goods Manufactured.	Number Employed.				Sanitary Condition.	Orders Given.	Compliances.
		Males.	Females.	Under 14.	14 to 16.			
LEOMINSTER.								
F. A. Whitney Carriage Co.,	Baby carriages,	135	40	–	1	Good,	Post time tables; observe fifty-eight hour law.	Complied.
Wachusett Shirt Co.,	Shirts,	50	375	–	–	Good,	Post time tables,	Complied.
Wachusett Shirt Co.,	Colored shirts,	5	75	–	6	Good,	Post time tables; get four certificates.	Complied.
Wachusett Shirt Co.,	Laundry,	50	50	–	–	Good,	Post time tables,	Complied.
LOWELL.								
Bon Marche Dry Goods Co.,	Millinery,	–	6	–	–	Good,	Post time table,	Complied.
A. M. Abels,	Furs and millinery,	–	14	–	–	Good,	Post time table,	Complied.
Cook, Taylor & Co.,	Garments,	–	12	–	–	Good,	Post time table,	Complied.
W. J. Sanborn & Co.,	Millinery,	–	8	–	–	Good,	Post time table,	Sold out.
M. L. Delude,	Millinery,	–	8	–	–	Good,	Post time table,	Complied.
LYNN.								
P. B. Magrane,	Millinery,	–	4	–	–	Good,	Post time table,	Complied.
A. M. Farley,	Millinery,	–	9	–	–	Good,	Post time table,	Complied.
F. A. Burnsville,	Dresses,	–	5	–	–	Good,	Post time table,	Complied.
N. L. Burns,	Dresses,	–	3	–	–	Good,	Post time table,	Complied.
S. S. Fellows,	Dresses,	–	2	–	–	Good,	Post time table,	Complied.
A. Best,	Millinery,	–	2	–	–	Good,	Post time table; observe fifty-eight hour law.	Complied.

Digitized by Google

E. M. Maguire,	Dresses,	–	2	–	–	Fair,	Post time table; provide closet,	–*
E. B. Fellows,	Millinery,	–	10	1	–	Good,	Post time table; get certificate; observe fifty-eight hour law.	Complied.
Doty & Mansfield,	Millinery,	–	4	–	–	Good,	Post time table,	Complied.
Curtis & Spidell Co.,	Elastic bandages,	12	5	–	–	Good,	Post time table,	Complied.
Annie M. Riley,	Millinery,	–	4	–	–	Good,	Post time table; observe fifty-eight hour law.	Complied.
T. W. Rogers,	Dresses,	–	2	–	–	Good,	Post time table,	Complied.
H. Cunningham,	Dresses,	–	2	–	–	Good,	Post time table,	Complied.
J. L. Walker,	Shoes,	70	34	–	1	Good,	Get certificate,	Complied.
J. L. Maloney,	Millinery,	–	3	–	–	Good,	Post time table,	Complied.
Dearborn & Cushman,	Millinery,	–	2	–	–	Good,	Post time table,	Complied.
K. J. Hayes,	Dresses,	–	2	–	–	Good,	Post time table,	Complied.
K. M. Cullen,	Dresses,	–	3	–	–	Good,	Post time table,	Complied.
Walden & Vaughn,	Confectionery,	2	2	–	–	Fair,	Provide additional closet,	Complied.
E. J. Phelan,	Shoes,	50	75	–	–	Good,	Post time tables,	Complied.
D. A. Donovan & Co.,	Shoes,	134	96	–	–	Good,	Post time tables,	Complied.
Chas. E. Harwood & Co.,	Soles and counters,	67	18	–	–	Poor,	Post time table; provide additional closet.	Complied.
E. F. McKeon,	Millinery,	–	6	–	–	Good,	Post time table; observe fifty-eight hour law.	Complied.
J. F. Vella,	Heels,	7	2	–	–	Fair,	Provide additional closet,	Complied.
Lynn Heel Co.,	Heels,	7	22	–	1	Fair,	Get certificate,	Complied.
Eckhardt & Ford,	Shoes,	25	20	–	1	Fair,	Get certificate,	Complied.
F. B. Abbott,	Shoes,	30	23	–	–	Fair,	Post time table,	Complied.
Lynn Cork Co.,	Cork soles,	7	20	–	3	Good,	Get three certificates,	Complied.
A. E. Gloyd,	Shoes,	26	20	–	1	Good,	Post time table,	Complied.
Barker & Lord,	Shoes,	25	10	–	–	Good,	Post time table,	Complied.
Strout, Sager & Co.,	Shoes,	20	20	–	–	Good,	Post time table,	Complied.

* Complied in part.

Digitized by Google

SPECIAL DUTY, MARY A. NASON, *Inspectress — Continued.*

NAME OF FACTORY OR WORKSHOP.	Goods Manufactured.	Number Employed.				Sanitary Condition.	Orders Given.	Compliances.
		Males.	Females.	Under 14.	14 to 16.			
LYNN — *Concluded.*								
A. McMahon,	Dresses,	–	3	–	–	Good,	Post time table,	Complied.
Frank E. Vincent,	Boxes,	20	30	–	–	Fair,	Post time table,	Complied.
NATICK.								
Nutt & Pratt,	Shoes,	190	35	–	9	Good,	Get six certificates,	Complied.
Cloutman & Dunham,	Shoes,	91	24	–	1	Bad,	Get certificate; designate closet,	Complied.
J. W. Walcott,	Shoes,	95	25	–	1	Good,	Designate closet,	Complied.
SALEM.								
W. G. Webber & Co,	Millinery,	–	6	–	–	Good,	Post time table,	Complied.
L. T. Robinson,	Millinery,	–	4	–	–	Good,	Post time table,	Complied.
M. B. Wilson,	Millinery,	–	2	–	–	Good,	Post time table,	Complied.
A. L. Goddard,	Dresses,	–	3	–	–	Good,	Post time table,	Complied.
Mme. Pauline,	Millinery,	–	4	–	–	Good,	Post time table,	Complied.
Almy, Bigelow & Washburn,	Mercantile,	55	112	–	13	Good,	Get two certificates,	Complied.
Almy, Bigelow & Washburn,	Millinery,	–	4	–	–	Good,	Post time table,	Complied.
H. F. Curtis,	Confectionery,	2	3	–	–	Poor,	Provide additional closet,	Complied.
L. F. Dodge,	Dresses,	–	3	–	–	Poor,	Post time table,	Complied.
E. H. Chinn,	Dresses,	–	12	–	–	Good,	Post time table,	Complied.
Mme. Wetherell,	Dresses,	–	4	–	–	Good,	Post time table,	Complied.

Digitized by Google

S. E. Walwork,	Millinery,	–	7	–	–	Good,	Post time table,	Complied.
E. A. Chagnon,	Dresses,	–	3	–	–	Good,	Post time table,	Complied.
Georgeanna Cote,	Dresses,	–	5	–	–	Good,	Post time table,	Complied.
Mme. D. Dupont,	Millinery,	–	4	–	–	Good,	Post time table,	Complied.
L. A. Brown,	Dresses,	–	3	–	–	Good,	Post time table,	Complied.
Keith & Co.,	Millinery,	1	14	–	–	Good,	Procure one certificate; post time table.	Complied.
Flora Alden,	Dresses,	–	15	–	–	Good,	Post time table,	Complied.
E. J. Johnson,	Dresses,	–	15	–	–	Good,	Post time table,	Complied.
M. E. Perkins,	Dresses,	–	3	–	–	Good,	Post time table,	Complied.
E. A Hartshorn,	Dresses,	–	3	–	–	Good,	Post time table,	Complied.
K. H. Browne,	Millinery,	–	5	–	–	Good,	Post time table,	Complied.
J. Michelson,	Mercantile,	2	6	–	–	Bad,	Provide additional closet,	Complied.
E. Hamilton,	Millinery,	–	4	–	–	Good,	Post time table,	Complied.
E. P. Davis,	Millinery,	–	6	–	–	Good,	Post time table,	Complied.
J. M. Buck,	Millinery,	–	6	–	–	Bad,	Post time table,	Complied.
C. E. Bates,	Dresses,	–	4	–	–	Good,	Post time table,	Complied.
SPRINGFIELD.								
M. E. Fishlocke,	Millinery,	–	4	–	1	Good,	Post time table,	Complied.
F. N. Chapin,	Millinery,	–	2	–	–	Good,	Post time table,	Complied.
M. Reisberg,	Ladies' tailor and furrier.	2	4	–	–	Good,	Post time table,	Complied.
V. E. Desantels,	Millinery,	1	12	–	–	Good,	Post time table,	Complied.
S. H. Dyer,	Dresses,	–	3	–	–	Fair,	Post time table,	Complied.
Lazell, Dawes & Estey,	Millinery,	–	8	–	–	Good,	Post time table,	Complied.
Dower & Fitzgibbon,	Millinery,	1	8	–	1	Good,	Post time table,	Complied.
D. H. Brigham & Co.,	Cloaks, furs and dresses.	2	23	–	–	Good,	Post time tables,	Complied.
M. B. Morris,	Millinery,	1	8	–	–	Good,	Post time table,	Complied.

Digitized by Google

SPECIAL DUTY, MARY A. NASON, *Inspectress — Concluded.*

NAME OF FACTORY OR WORKSHOP.	Goods Manufactured.	Number Employed.				Sanitary Condition.	Orders Given.	Compliances.
		Males.	Females.	Under 14.	14 to 16.			
WORCESTER.								
Edward L. Smith & Co,	Millinery,	–	12	–	–	Good,	Post time table,	Complied.
Barnard, Sumner, Putnam & Co.,	Dresses,	3	37	–	–	Good,	Post time table,	Complied.
Barnard, Sumner, Putnam & Co.,	Millinery,	–	6	–	–	Good,	Post time table,	Complied.
Barnard, Sumner, Putnam & Co.,	Draperies and upholstery.	4	2	–	–	Good,	Post time table,	Complied.
Barnard, Sumner, Putnam & Co.,	Mercantile,	85	69	2	23	Good,	Get four certificates,	Complied.
W. H. Burns & Co.,	Ladies' underwear,	25	400	–	–	Good,	Post time tables,	Complied.
R. Gross & Co,	Mercantile,	4	30	–	2	Good,	Get two certificates,	Complied.
Boston Store,	Dresses,	6	34	–	–	Good,	Post time table,	Complied.
A. T. McMahon,	Dresses,	–	4	–	–	Good,	Post time table,	Complied.
B. T. Whitney,	Dresses,	–	2	–	–	Good,	Post time table,	Complied.
Frazier & Carroll,	Dresses,	–	3	–	–	Good,	Post time table,	Complied.
Williams & Bridges,	Boxes,	26	14	–	–	Good,	Post time table,	Complied.
Globe Corset Co.,	Corsets,	10	115	–	15	Good,	Post time tables; get ten certificates,	Complied.
J. A Powers,	Dresses,	–	10	–	–	Fine,	Post time table,	Complied.
E. M. Tripp,	Dresses,	1	11	–	–	Fine,	Post time table,	Complied.
Ware, Pratt & Co.,	Men's clothing,	14	46	–	–	Fine,	Post time table,	Complied.
K. A. Manley,	Dresses,	–	2	–	–	Fine,	Post time table,	Complied.
A. L. Holcomb,	Millinery,	–	8	–	–	Good,	Post time table,	Complied
Isador Fish,	Dresses,	1	6	–	–	Good,	Post time table,	Complied.
M. L. Wheeler,	Dresses,	–	4	–	–	Good,	Post time table,	Complied.
A. Reiley,	Dresses,	–	2	–	–	Good,	Post time table,	Complied.

Digitized by Google

A. M. Bellerose,	Dresses,	–	3	–	–	Good,	Post time table,	Complied.
M. Z. Wilmot,	Dresses,	–	2	–	–	Good,	Post time table,	Complied.
M. E. Tibbitts,	Dresses,	–	4	–	–	Good,	Post time table,	Complied.
R. E. Bean,	Dresses,	–	12	–	1	Good,	Post time table,	Complied.
W. H. Sweeney & Co.,	Millinery,	–	14	–	–	Good,	Post time table,	Complied.
A. W. Balcom,	Dresses,	–	3	–	–	Good,	Post time table,	Complied.
A. B. Forsberg,	Dresses,	–	7	–	–	Good,	Post time table,	Complied.
A. S. Lowell & Co.,	Millinery,	–	25	–	–	Good,	Post time table,	Complied.
A. S. Lowell & Co.,	Mercantile,	7	42	–	3	Good,	Get three certificates,	Complied.
K M. Schofield,	Millinery,	–	6	–	–	Good,	Post time table,	Complied.
C. C. Gallagher,	Millinery,	1	10	–	–	Good,	Post time table,	Complied.
Rocheleau & Belisle,	Millinery,	1	9	–	–	Good,	Post time table,	Complied.
Mary Gnider,	Dresses,	–	8	–	–	Good,	Post time table,	Complied.
WALTHAM.								
F. O. Bowen,	Millinery,	–	4	–	–	Good,	Post time table,	Complied.
A. E. Burton,	Millinery,	–	5	–	–	Good,	Post time table,	Complied.
C. F. Lamb,	Mercantile,	3	4	–	–	Good,	Provide additional closet,	Complied.
W. N. Towne,	Mercantile,	3	2	–	–	Good,	Provide additional closet,	Complied.
J. W. McCurdy,	Millinery,	–	5	–	–	Good,	Post time table,	Complied.
J. E. Farmer,	Mercantile,	2	3	–	–	Good,	Provide additional closet,	Complied.
N. L. Lynch,	Millinery,	–	4	–	–	Good,	Post time table,	Complied.
WATERTOWN.								
Hood Rubber Co.,	Rubber boots and shoes.	375	225	–	6	Good,	Get two certificates,	Complied.

Digitized by Google

Report of Elevators Inspected.

DISTRICT NO. 1. CHARLES E. BURFITT, *Inspector.*

NAME OF BUILDING.	No. of Elevators.	Condition.	Orders Given.	Compliances.
Ayer.				
W. T. Piper & Co.,	1	Poor,	Strengthen posts,	Complied.
Levi W. Phelps,	1	Good,	None,	-
Ayer Tanning Co,	1	Good,	None,	-
Bay State Wood Rim Co.,	2	Good,	None,	-
Acton.				
C. A. Merriam,	2	Good,	None,	-
F. R. Knowlton,	1	Good,	None,	-
Arlington.				
Samuel H. Fowle,	2	Good,	None,	-
Theodore Schwamb,	1	Poor,	Repair safety,	Complied.
Burlington.				
M. E. Carter,	1	Good,	None,	-
Cambridge.				
A. H. Hewes,	1	Poor,	Repair safety,	Complied.
A. H. Hewes,	2	Good,	None,	-
Adolph Somers,	1	Poor,	Repair safety,	Complied.
Damon Safe Co.,	1	Good,	None,	-
Henderson Brothers,	2	Good,	None,	-
Broadway Foundry,	1	Good,	None,	-
Geo. R. Oliver,	2	Good,	None,	-
Harvard Piano Co.,	1	Good,	None,	-
B. P. Clark,	1	Good,	None,	-
Lamb & Ritchie,	1	Good,	None,	-
Sylvester Tower & Son,	2	Good,	None,	-
Black & Shepard,	1	Good,	None,	-
Ginn Co.,	2	Good,	None,	-
Mason & Hamlin,	2	Good,	None,	-
Riverside Boiler Co,	1	Good,	None,	-
Keeler & Co.,	1	Good,	None,	-
A. B. & E. L. Shaw,	1	Good,	None,	-
W. C. Badger & Co.,	2	Good,	None,	-
Cambridge Laundry,	1	Good,	None,	-
University City Laundry,	1	Poor,	Repair safety,	Complied.
Ira G. Hersey,	1	Good,	None,	-
Derby Desk Co.,	2	Good,	None,	-
W. L. Lockhart & Co,	1	Good,	None,	-
Irving & Casson,	1	Good,	None,	-
J H. Keenan Co.,	1	Good,	None,	-
Standard Brass Co.,	1	Good,	None,	-
John Reardon & Son,	3	Good,	None,	-
A. H Davenport,	3	Good,	None,	-
Geo. Close,	1	Good,	None,	-
Charles Place,	1	Good,	None,	-
Bay State Confectionery,	1	Good,	None,	-
McDonald Bros.,	1	Good,	None,	-
James H. Roberts & Co.,	1	Good,	None,	-
Seelye Mfg. Co,	1	Good,	None,	-
John C. Dow,	1	Good,	None,	-
Jensen Bros,	1	Poor,	Repair safety,	Complied.
H. F. Sparrow,	1	Good,	None,	-
Charles Waugh,	1	Good,	None,	-
Russell & Co.,	1	Good,	None,	-
Hall Bros.,	1	Poor,	Repair safety,	Complied.
Lysander Kemp & Son,	1	Good,	None,	-
Whitmore & Pride Mfg. Co,	1	Good,	None,	-
Geo. W. Seavernes,	1	Good,	None,	-
C. L. Jones & Co.,	1	Good,	None,	-
Hugh Stewart & Co.,	1	Good,	None,	-
Harvard Printing Co.,	1	Good,	None,	-
John P. Squires,	13	Good,	None,	-
Henry Thayer & Son,	1	Good,	None,	-
Ivers & Pond,	2	Good,	None,	-
American Rubber Co.,	1	Poor,	Repair safety,	Complied.
American Rubber Co.,	2	Good,	None,	-
Morse & Whyte,	2	Good,	None,	-
Cushing Process,	1	Good,	None,	-
Boston Packing Co.,	1	Good,	None,	-

Digitized by Google

Report of Elevators Inspected — Continued.

Name of Building.	No. of Elevators.	Condition.	Orders Given.	Compliances.
Cambridge — Con.				
Kennedy Biscuit Co.,	4	Good,	None,	-
American Net and Twine Co.,	3	Good,	None,	-
Revere Sugar Refinery,	3	Good,	None,	-
Richard Tyner & Son,	1	Good,	None,	-
D M. Hazen & Co.,	1	Good,	None,	-
James C. Davis & Son,	2	Good,	None,	-
Barbour & Stockwel Co.,	2	Good,	None,	-
Page Box Factory,	2	Good,	None,	-
Reversible Collar Co ,	3	Good,	None,	-
Curtis. Davis & Co.,	5	Good,	None,	-
J. H H. McNamee,	1	Good,	None,	-
Seavey Mfg. Co..	1	Poor,	Repair safety,	Complied.
Boston Rubber Hose Co.,	3	Good,	None,	-
Cambridge Diary Co.,	1	Good,	None,	-
Riverside Bindery,	1	Good,	None,	-
Riverside Press,	4	Good,	None,	-
Laminer Fibre Co.,	1	Poor,	Repair safety,	Complied.
University Press,	3	Good,	None,	-
Sawyer Belting Co.,	1	Good,	None,	-
Geo. F. Blake Co.,	7	Good,	None,	-
Stewart Brothers Co.,	1	Good,	None,	-
Dover Stamping Co.,	1	Good,	None,	-
Riverside Pottery,	1	Good,	None,	-
E. & R. Laundry,	1	Good,	None,	-
Everett.				
Edward Dewey,	1	Good,	None,	-
H. D. Gloyd,	1	Good,	None,	-
L Libbman,	1	Good,	None,	-
Andrews & Co.,	1	Good,	None,	-
Hudson.				
Stow, Bell & Halley,	1	Good,	None,	-
C. J. Sawyer,	1	Good,	None,	-
L. T. Jefts Co.,	1	Good,	None,	-
F. Brigham & Co.,	2	Good,	None,	-
Bradley & Sayward,	1	Good,	None,	-
Dun, Green & Co.,	1	Good,	None,	-
Novelty Box Co.,	1	Good,	None,	-
J. L. Ballantyne,	1	Good,	None,	-
C. J. Shaw,	1	Good,	None,	-
Littleton.				
Conant & Houghton,	1	Good,	None,	-
Avery Chemical Co.,	1	Poor,	Repair safety,	Complied.
Maynard.				
Assabet Co.,	5	Good,	None,	-
Harriman Brothers,	1	Good,	None,	-
Melrose.				
New England Moulding Co.,	1	Poor,	Repair gate,	Complied.
Boston Rubber Shoe Co.,	4	Good,	None,	-
A. W. Chesterton & Co.,	1	Good,	None,	-
R. H. Sercom,	1	Poor,	Repair safety,	Complied.
Medford.				
Medford Mfg Co.,	1	Good,	None,	-
Oliver Whyte,	1	Poor,	Repair gates,	Complied.
Glenwood Mills,	1	Good,	None,	-
Mystic Print Works,	1	Good,	None,	-
John C Dow,	1	Good,	None,	-
H. C. Spear,	1	Good,	None,	-
Malden.				
John Cockran,	1	Good,	None,	-
C. T. Josyln & Co.,	1	Poor,	Repair gates,	Complied.
Miller & Sherin,	1	Poor,	Protect openings,	Complied.
Malden Stock Laundry,	1	Good,	None,	-
G. P. Cox,	1	Good,	None,	-
Middlesex Last Co.,	1	Good,	None,	-
Jordan & Christie,	1	Good,	None,	-
Malden Last Co.,	1	Good,	None,	-

Digitized by Google

Report of Elevators Inspected — Continued.

Name of Building.	No. of Elevators.	Condition.	Orders Given.	Compliances.
Malden — Con.				
S. E. Vaughn,	1	Good,	None,	-
Robertson Bros.,	2	Good,	None,	-
Wiggens & Stevens,	3	Good,	None,	-
Wadsworth Howland Co.,	1	Good,	None,	-
Boston Rubber Shoe Co.,	7	Good,	None,	-
Webster Co.,	3	Good,	None,	-
Reading.				
E. A. Vinton Co,	1	Good,	None,	-
E. B. Richardson,	1	Good,	None,	-
Geo. Adams & Co.,	1	Good,	None,	-
Pepperell.				
Nashua River Paper Co.,	4	Good,	None,	-
Gregory Shaw & Co,	1	Poor,	Repair safety,	Complied.
Gregory Shaw & Co.,	2	Good,	None,	-
Champion Card Paper Co.,	1	Good,	None,	-
Pepperell Card Paper Co.,	2	Good,	None,	-
Shirley.				
C. A. Edgerton Co.,	1	Good,	None,	-
Sampson Cordage Co,	1	Poor,	Repair safety,	Complied.
Stoneham.				
C. A. Fitzgerald,	2	Good,	None,	-
T. H. Jones,	2	Good,	None,	-
H. B. Tucker,	1	Poor,	Repair gates,	Complied.
Harry E. Hersom,	1	Good,	None,	-
P. Cogan,	1	Good,	None,	-
Wm. Tidd & Co.,	2	Poor,	Repair safety,	Complied.
Henry Bois & Son,	1	Good,	None,	-
W. P. Fletcher,	1	Good,	None,	-
G. W. Turner & Co,	1	Good,	None,	-
M. F. Butler,	1	Good,	None,	-
Blank Bros.,	1	Good,	None,	-
Townsend.				
Spaulding Bros.,	1	Good,	None,	-
Winchester.				
Beggs & Cobb,	2	Good,	None,	-
McKay Metallic Co.,	1	Good,	None,	-
Runsturna Mfg. Co.,	1	Poor,	Repair safety,	Complied.
Wilmington.				
Perry & Harriman,	1	Poor,	Protect openings,	Complied.
Woburn.				
A. L. Richardson,	1	Good,	None,	-
Russell Counter Co.,	1	Good,	None,	-
N. W. Eaton & Co.,	1	Good,	None,	-
Shedd & Crane,	1	Good,	None,	-
James H. Carr,	1	Good,	None,	-
G A Simmonds & Co.,	1	Good,	None,	-
J. B. Murry,	1	Poor,	Repair safety,	Complied.
Stephen Dow & Co,	1	Good,	None,	-
J. P. Crane,	1	Good,	None,	-
E. C. Cuttle & Son,	1	Good,	None,	-
W. P. Fox & Son,	1	Poor,	Repair safety,	Complied.
W. C Rinney,	1	Good,	None,	-
E. Cummings & Co.,	1	Good,	None,	-
James Skinner Mfg. Co.,	2	Good,	None,	-
James Skinner Mfg. Co.,	1	Poor,	Repair safety,	Complied.
Middlesex Leather Co.,	1	Good,	None,	-
Middlesex Leather Co,	1	Poor,	Repair safety,	Complied.
Watauga Leather Co.,	1	Good,	None,	-
Beggs & Cobb,	1	Poor,	Protect openings,	Complied.
James Skinner Co.,	1	Good,	None,	-
B. F. Kimball,	1	Poor,	Protect openings,	Complied.
T. Colnan,	1	Good,	None,	-
E. R. Rollens, Jr.,	1	Good,	None,	-
J F. Buel,	1	Good,	None,	-
Pollard & Groath,	1	Good,	None,	-

Digitized by Google

Report of Elevators Inspected — Continued.

Name of Building.	No. of Elevators.	Condition.	Orders Given.	Compliances.
Woburn — Con.				
W. P Fox & Son,	1	Good,	None,	-
Baeder & Adamson,	2	Good,	None,	-
Merrimac Chemical Co.,	3	Poor,	Repair safety,	Complied.
Geo. E. Brown,	1	Good,	None,	-
Wakefield.				
Smith & Anthony,	2	Good,	None,	-
Harvard Knitting Co.,	2	Good,	None,	-
L. B. Evens & Son,	1	Good,	None,	-
Henry Miller & Son,	1	Good,	None,	-
Wakefield Rattan Co.,	9	Good,	None,	-
Cutler Brothers,	1	Poor,	Repair safety,	Complied.
Wayland.				
Charles H. Dean & Co.,	2	Good,	None,	-
N. C. Griffen,	1	Good,	None,	-
William Shoe Co.,	1	Poor,	Repair safety,	Complied.
Waltham.				
Waltham Mfg Co.,	1	Good,	None,	-
Waltham Bleachery,	3	Good,	None,	-
Waltham Watch Co.,	1	Good,	None,	-
Boston Mfg. Co.,	8	Good,	None,	-
American Laundry Co.,	1	Poor,	Repair safety,	Complied.
American Crayon Co.,	1	Good,	None,	-
Waltham Foundry,	1	Good,	None,	-
Waltham Emery Wheel Co,	1	Good,	None,	-
Somerville.				
American Tube Co.,	2	Good,	None,	-
Middlesex Bleachery,	2	Good,	None,	-
Cushman Brothers Co.,	1	Good,	None,	-
Sprague & Hathaway,	1	Good,	None,	-
John N. Ball,	1	Good,	None,	-
Williams Table Works,	1	Good,	None,	-
Union Glass Co.,	1	Good,	None,	-
Sturtevant & Halley,	1	Good,	None,	-
C H. Hinckley,	1	Good,	None,	-
North Packing Co,	17	Good,	None,	-
N. E Dressed Meat Co.,	5	Good,	None,	-
Kiley Brothers,	1	Good,	None,	-
Keer Chemical Co,	1	Good,	None,	-

Report of Elevators Inspected.

District No. 2. JOSEPH HALSTRICK, *Inspector.*

Name of Building.	No. of Elevators.	Condition.	Orders Given.	Compliances.
Ashland.				
Warren Thread Co.,	1	Good,	None,	-
Bellingham.				
Taft, Murdock & Co,	1	Good,	None,	-
Franklin.				
E. P. Bassett & Co,	1	Good,	None,	-
Trowbridge Piano Co.,	1	Good,	Keep doors to elevator well closed when not in use.	Complied.
Framingham.				
T. L. Barber,	1	Good,	None,	-
Smalley & Co.,	1	Good,	None,	-
Dennison Mfg. Co.,	6	Good,	None,	-
Gregory, Shaw & Co.,	2	Good,	None,	-
Armour & Co,	1	Good,	Keep gates to well closed when not in use.	Complied.

Digitized by Google

Report of Elevators Inspected — Continued.

Name of Building.	No. of Elevators.	Condition.	Orders Given.	Compliances.
Framingham — Con.				
A. M. Eames,	1	Good,	None,	-
Framingham Box Co.,	1	Good,	None,	-
Saxonville Mill,	2	Good,	None,	-
Hopkinton.				
Crooks, Root & Co.,	1	Good,	None,	-
F. H. Claflin,	1	Fair,	Guard elevator well,	Complied.
Cloutman, Dunham & Co.,	1	Good,	None,	-
Hopedale.				
Draper Co.,	5	Good,	None,	-
Holliston.				
John Clancy,	1	Good,	None,	-
Milford.				
Milford Shoe Co., No 1,	2	Good,	None,	-
Milford Shoe Co, No. 2,	2	Good,	None,	-
Clapp, Huckins & Temple,	1	Good,	None,	-
Greene Bros.,	1	Fair,	None,	-
Millis.				
Clicquoit Club Bottling Co.,	1	Good,	None,	-
Medway.				
Cole & Senior,	2	Good,	None,	-
Marlborough.				
Elmer Loring,	1	Good,	None,	-
John O'Connell & Sons,	1	Good,	None,	-
John A. Frye,	2	Good,	Keep gates to elevator well closed when not in use.	Complied.
S. H. Howe Shoe Co.,	1	Good,	None,	-
Henry Parsons,	1	Good,	None,	-
S. H. Howe Shoe Co.,	1	Good,	None,	-
S. H. Howe,	1	Good,	None,	-
S. H. Howe,	1	Good,	None,	-
The S. H. Howe Shoe Co.,	1	Good,	None,	-
S. H. Howe Co.,	1	Good,	None,	-
The Wood & Willard Machine Co.	1	Good,	None,	-
E. M. Low Paper Box Co.,	1	Good,	Keep gates to elevator well closed when not in use.	Complied.
O. H. Stevens Mfg. Co.,	1	Good,	None,	-
Rice & Hutchins,	1	Fair,	Guard elevator well,	Complied.
Rice & Hutchins, Cotting Ave,	1	Good,	None,	-
Frank & Duston,	1	Good,	None,	-
Rice & Hutchins Middlesex Co.	1	Good,	None,	-
Natick.				
Sawyer & Coombs,	1	Good,	None,	-
J. W. Wolcott & Co.,	1	Good,	None,	-
Nutt & Pratt,	2	Good,	None,	-
E. Edwards & Sons,	1	Good,	None,	-
O. Woods & Co.,	1	Good,	None,	-
Johnson, Dale & Aldrich,	1	Good,	None,	-
Cloutman, Dunn & Co.,	1	Good,	None,	-
E. Dowd,	1	Good,	Guard elevator drum and gearing.	Complied.
Wm. F. Pfieffer,	1	Good,	None,	-
Schneider Bros. & Co.,	1	Fair,	None,	-
O. A. Felch,	1	Good,	None,	-
Needham.				
Union Cycle Mfg. Co.,	1	Good,	None,	-
Southborough.				
Cordaville Woolen Co.,	1	Fair,	None,	-
Wellesley.				
Dudley Mills,	1	Good,	None,	-
Robert Bishop,	2	Fair,	None,	-

Digitized by Google

Report of Elevators Inspected.

DISTRICT No. 4. MALCOLM SILLARS, *Inspector.*

NAME OF BUILDING.	No. of Elevators.	Condition.	Orders Given.	Compliances.
Chelsea.				
Albion Lord & Co.,	1	Poor,	New rope,	Complied.
W. H. Norris & Son,	1	Good,	None,	-
Stickney, Terrell & Co.,	1	Good,	None,	-
Seaver & Co.,	1	Good,	None,	-
Magee Furnace Co.,	5	Good,	None,	-
Austin & Graves,	1	Good,	None,	-
Revere Rubber Co.,	1	Good,	None,	-
Bartel & Thehen,	1	Good,	None,	-
Atwood & McManus,	1	Poor,	Provide new rope,	-
Sweet Car Wheel Co ,	1	Good,	None,	-
Halway Mfg. Co.,	1	Poor,	Repair safety,	Complied.
Geo. D Emery,	1	Good,	None,	-
T. Strahan & Co ,	1	Good,	None,	-
C. F. Kelly & Co.,	1	Good,	None,	-
A. S. Rogers Shoe Co.,	1	Good,	None,	-
Mt. Washington Spring Co.,	1	Good,	None,	-
Low Art Tile Co.,	1	Good,	None,	-
Lynch Bros.,	1	Good,	None,	-
Magoon Leather Co.,	1	Good,	None,	-
Am. Fire Hose Mfg. Co.,	1	Good,	None,	-
Forbes Lithograph Co.,	1	Good,	None,	-
Revere.				
State Laundry,	2	Good,	None,	-
D. & L. Slade Co.,	1	Good,	None,	-
Somerville.				
Raymond Bicycle Co.,	1	Poor,	Provide counter balance,	-

Report of Elevators Inspected.

DISTRICT No. 6. JOHN F. TIERNEY, *Inspector.*

NAME OF BUILDING.	No. of Elevators.	Condition.	Orders Given.	Compliances.
Norton.				
Norton Mills,	1	Good,	None,	-
South Easton.				
Rose Heel Co.,	1	Good,	None,	-
South Attleborough.				
Wm. Couper & Co.,	1	Good,	None,	-
Sandwich.				
A. V. Johnson & Co.,	1	Good,	None,	-
Somerset.				
Somerset Enamelled Brick Co.	1	Good,	None,	-
Somerset Stove Foundry,	1	Good,	None,	-
North Dighton.				
North Dighton Cotton Co.,	1	Good,	Repair safety device,	Complied.
Lincloln & Co.,	1	Good,	None,	-
Taunton.				
Reed & Barton,	8	Good,	Automatic gates,	Complied.
Whittenton Mfg. Co.,	8	Good,	Automatic gates,	Complied.
Cohannet Mills,	5	Good,	None,	-
Corr Mfg. Co.,	1	Good,	None,	-
Cannoe River Mills,	1	Good,	None,	-
Elizabeth Poole Mills,	2	Good,	Repair safety device,	Complied.
Namasket Mills,	1	Good,	None,	-

Digitized by Google

Report of Elevators Inspected — Continued.

Name of Building.	No. of Elevators.	Condition.	Orders Given.	Compliances.
Taunton — Con.				
Norton Bros Steam Laundry,	1	Good,	None,	-
Atlas Tack Co	4	Good,	New safety device,	Complied.
Taunton Tack Co,	2	Good,	None,	-
Oakland Mills,	1	Good,	None,	-
Westville Mills,	1	Good,	Repair safety device,	Complied.
Eagle Mills,	1	Good,	None,	-
Taunton Locomotive Co.,	2	Good.	None,	-
Mason Machine Co.,	6	Good,	New safety device,	Complied.
Taunton Oil Cloth Co,	3	Good,	None,	-
New England Stove Co.,	1	Bad,	Condemned,	-
The White Warner & Co.,	1	Good,	None,	-
C. A. Hack & Son,	1	Good,	None,	-
Mansfield.				
R. Rumsey & Co.,	1	Good,	None,	-
Comey & Co.,	1	Good,	None,	-
North Easton.				
Hatch & Grinell,	1	Good,	None,	-
Attleborough Falls.				
Gold Medal Braid Co.,	1	Good,	None,	-
Attleborough.				
Hebron Mills,	1	Good,	None,	-
Dodgvill Mills,	2	Good,	None,	-
Howard & Bullough Machine Co.	3	Good,	None,	-
New Bedford.				
Hathaway Mfg. Corporation,	3	Good,	None,	-
Acushnet Mill Corporation,	4	Good,	None,	-
Dartmouth Mfg. Co.,	2	Good,	None,	-
City Mfg. Corporation,	2	Good,	New ropes on elevator,	Complied.
Potomska Mills,	2	Good,	None,	-
Wamsutta Mills,	11	Good,	None,	-
New Bedford Spinning Co.,	2	Good,	None,	-
D. A. Snell,	2	Good,	None,	-
Grinnell Mfg. Corporation,	3	Good,	New ropes on elevators,	Complied.
Bennett Mills,	5	Good,	None,	-
Bristol Mills,	1	Good,	None,	-
Hathaway, Soule & Harrington.	1	Good,	None,	-
Pierce Mfg. Co.,	2	Good,	None,	-
Rotch Spinning Corporation,	4	Good,	None,	-
Howland Mills,	2	Good,	None,	-
Whitman Mills,	1	Good,	None,	-
N. B. Evening Standard,	1	Good,	None,	-
National Cordage Co.,	1	Good,	None,	-
J. C. Rhods & Son,	2	Fair,	Repair safety device,	Complied.
Bay State Chair Co.,	1	Good,	None,	-
Wm. R. West,	1	Good,	None,	-
Morsse Twist Drill Co.,	2	Good,	None,	-
Fairpoint Mfg. Co.,	5	Good,	Automatic gates,	Complied.
C. F. Wings,	2	Good,	None,	-
Fairhaven.				
Atlas Tack Co.,	2	Good,	None,	-
Fairhaven Iron Foundry,	1	Good,	None,	-
Thatcher Bros.,	1	Good,	None,	-
Westport Factory.				
Westport Factory,	2	Good,	None,	-
Fall River.				
Mechanics Mills,	3	Good,	New gates on elevator,	Complied.
Weetamoe Mills,	2	Good,	None,	-
Shove Mills,	1	Good,	None,	-
Troy C. & W. Mfg. Co.,	2	Good,	Repair safety device,	Complied.
Granite Mills,	5	Good,	None,	-
Conanicut Mills,	1	Good,	None,	-
Sanford Spinning Co.,	2	Good,	None,	-
Seaconnet Mills,	3	Good,	New ropes on elevator,	Complied.

Digitized by Google

Report of Elevators Inspected — Continued.

Name of Building.	No. of Elevators.	Condition.	Orders Given.	Compliances.
Fall River — Con.				
Davol Mills,	1	Good,	None,	-
Hargraves Mills No. 1,	1	Good,	None,	-
Hargraves Mills Nos. 1 and 2,	2	Good,	Repair safety device and put new ropes on elevator.	Complied.
Fall River Manufactory,	2	Good,	None,	-
Metacomet Mfg. Co.,	1	Good,	None,	-
Border City Mills,	4	Good,	None,	-
Kerr Thread Mills,	4	Good,	None,	-
Barnard Mfg Co,	2	Good,	Repair safety device,	Complied.
Tecumseh Mills No. 1,	1	Good,	None,	-
Tecumseh Mills No 2,	2	Good,	New rope,	Complied
Stafford Mills,	4	Good,	None,	-
King Philip Mills,	6	Good,	Automatic gates and repair safety device.	Complied.
Narragansett Mills,	3	Good,	New ropes,	Complied.
Laurel Lake Mills,	2	Good,	None,	-
Osborn Mills,	4	Good,	Repair safety device,	Complied.
Massasoit Mfg Co.,	1	Good,	None,	-
Globe Yarn Mills,	6	Good,	Repair safety device,	Complied.
Sagamore Mfg. Co.,	2	Good,	None,	-
Parker Mills,	1	Good,	None,	-
Cornell Mills,	2	Good,	None,	-
Fall River Iron Works Co.,	7	Good,	Repair safety device,	Complied.
Wampanoag Mills,	4	Good,	None,	-
American Linen Mills,	5	Good,	None,	-
Union Belt Co.,	3	Good,	None,	-
Richard Borden Mfg. Co.,	3	Good,	Repair safety device,	Complied.
J. H. Estes & Son,	1	Good,	None,	-
Algonquin Printing Co.,	1	Good,	None,	-
Merchants Mfg. Co.,	4	Good,	None,	-
Slade Mills,	2	Good,	None,	-
Durfee Mills,	5	Good,	None,	-
Flint Mills,	2	Good,	None,	-
Jesse Eddy Mfg. Co.,	2	Good,	None,	-
Stevens Mfg. Co.,	1	Good,	None,	-
Union Cotton Mfg. Co.,	4	Good,	Repair elevator,	Complied.
American Printing Co.,	5	Good,	Automatic gates,	Complied.
D. M. Anthoney,	2	Fair,	Repair gates and safety device,	Complied.
Fall River Bleachery,	3	Good,	None,	-
Fall River Bobbin Co,	2	Good,	Repair safety device,	Complied.
Pocasset Mfg Co,	3	Good,	None,	-
Fall River Laundry,	1	Good,	None,	-
Barnaby Mfg. Co.,	1	Good,	None,	-
Chace Mills,	5	Good,	Repair worn gears,	-
Metallic Comb Co.,	1	Good,	None,	-
Old Colony Brewing Co.,	1	Good,	New gates,	Complied.
Fraprie, Douglass & Co.,	1	Good,	None,	-

Report of Elevators Inspected.

District No. 7. JAMES R. HOWES, *Inspector*.

Name of Building.	No of Elevators.	Condition.	Orders Given.	Compliances.
Chicopee.				
Ames Mfg. Co.,	2	Good,	None,	-
Belcher & Taylor,	1	Poor,	New cable,	Complied.
Chicopee Mfg. Co,	8	Good,	Two new cables,	Complied.
Dwight Mfg. Co.,	6	Good,	None,	-
Hampden Brewing Co.,	1	Good,	None,	-
Lamb Mfg. Co.,	4	Good,	New cable,	Complied.
J. Stevens Arms Co.,	2	Good,	None,	-
Easthampton.				
Nashawanuck Mfg. Co.,	1	Bad,	Provide safety device,	Complied.
Williston & Knight,	1	Bad,	New cable and new gates,	Complied.

Digitized by Google

Report of Elevators Inspected — Continued.

Name of Building.	No. of Elevators	Condition.	Orders Given.	Compliances.
Holyoke.				
Chemical Paper Co.,	4	Good,	Openings to be made automatic.	Complied.
Lyman Mills,	6	-*	Repair springs on three elevators.	Complied.
Beebe & Holbrook,	4	Good,	New cable,	Complied.
Whiting Paper Co.,	3	Good,	None,	-
Merrick Thread Co.,	6	-†	Automatic bars around elevator opening.	Complied.
Wauregan Paper Co.,	2	Good,	New cables,	Complied.
Linden Paper Co.,	3	Good,	None,	-
Hampden Glazed Paper Co.,	3	Fair,	New cable,	Complied.
Holyoke Warp Co.,	1	Good,	None,	-
Farr Alpaca Co,	6	-‡	New safety devices,	Complied.
Wm. Skinner Silk Co.,	4	Good,	None,	-
Crocker Mfg. Co.,	4	Fair,	New cable,	Complied.
John E. Brown Mfg. Co.,	1	Good,	Keep elevator gates in repair,	Complied.
Ludlow.				
Ludlow Mfg. Co.,	6	-§	Repair safety device,	Complied.
Monson.				
R. M. & T. Reynolds,	3	Good,	None,	-
Northampton.				
Florence Mfg. Co.,	2	-‖	New safety device,	Complied.
Nonotuck Silk Co.,	6	Good,	None,	-
Belden Bros.,	3	Good,	None,	-
Norwood Engineering Co.,	1	Good,	None,	-
Smith & Carr,	1	Fair,	Gates to be automatic,	Complied.
Palmer.				
Thorndike Co.,	4	Good,	None,	-
South Hadley.				
Carew Mfg. Co.,	3	Fair,	New cable,	Complied.
Springfield.				
National Needle Co.,	1	Good,	None,	-
Hodge's Fibre Carpet Co.,	1	Good,	None,	-
Fisk Mfg. Co.,	1	Good,	None,	-
Stebbins Mfg. Co.,	1	Fair,	Increase height of gates,	-
Milton, Bradley & Co.,	2	Good,	None,	-
Cherry Bigelow Wire Works,	2	Good,	None,	-
Kibbe, Crane & Co,	2	Good,	None,	-
Barney & Berry Skate Co.,	2	Good,	None,	-
Springfield Printing & Binding Co.	2	Fair,	Keep gates in repair,	Complied.
Westfield.				
American Whip Co.,	1	Fair,	Provide new cable,	Complied.
Pomeroy & Van Dusen,	1	Fair,	Keep gates in repair,	Complied.
Ware.				
Otis Co.,	6	Good,	None,	-

* Three good, three bad. † Five good, one poor. ‡ Four good, two bad.
§ Five good, one bad. ‖ One bad, one good.

Report of Elevators Inspected.

District No. 10. JAMES R. HOWES, *Inspector.*

Name of Building.	No. of Elevators.	Condition.	Orders Given.	Compliances.
Adams.				
Berkshire Cotton Co.,	8	Fair,	Four elevator openings; guard opening covers with automatic rail.	Complied.

Digitized by Google

Report of Elevators Inspected — Continued.

Name of Building.	No. of Elevators.	Condition.	Orders Given.	Compliances.
Adams — Con.				
L. L. Brown Paper Co.,	5	-*	New safety device,	Complied.
Renfrew Mfg. Co.,	2	Good,	None,	-
Dalton.				
Z. & W. M. Crane,	4	Good,	None,	-
Crane & Co.,	2	Good,	None,	-
Byron Weston Paper Co.,	6	Good,	None,	-
Lee.				
Hulbert Paper Co.,	2	Good,	None,	-
Hulbert Paper Co.,	1	Bad,	Repair safety device and gates,	Complied.
Smith Paper Co.,	1	Good,	None,	-
Orange.				
J. B. Reynolds,	1	Fair,	New cables,	Complied.
Orange Furniture Co,	1	Good,	None,	-
Home Sewing Machine Co.,	4	Good,	None,	-
Montague.				
Marshall Paper Co.,	2	Good,	None,	-
Keith Paper Co,	3	Good,	None,	-
Keith Paper Co.,	1	Bad,	New springs for safety,	Complied.
Pittsfield.				
Smith & Hadley,	1	Good,	None,	-
Teeling Baking Co.,	1	Good,	None,	-
O. W. Robbins Shoe Co.,	1	Good,	None,	-
Dodge and Daraney,	1	Good,	None,	-
A. A. Mills,	1	Good,	None,	-
Hurlburt Stationery Co,	1	Good,	None,	-
Robbins & Gamwell,	1	Good,	None,	-
K & W. Co.,	1	Good,	None,	-
Stanley Electric Co.,	8	Good,	Guard openings with rails,	Complied.
A. H. Rice & Co.,	1	Good,	None,	-
H. B. Wellington,	1	Fair,	Make gates automatic,	Complied.
Bray & Walker,	1	Bad,	New safety device,	Complied.
Hull & Morton,	1	Bad,	Repair safety device,	Complied.
North Adams.				
Arnold Print Works,	10	Good,	None,	-
Sampson Shoe Co,	2	Bad,	Repair safety device,	Complied.
Eagle Mill,	1	Fair,	New cable,	Complied.
Barber Leather Co.,	1	Good,	None,	-
N. L. Millard,	2	Good,	None,	-
Canedy & Clark,	1	Bad,	Not to be used,	Complied.
North Adams Mfg. Co.,	1	Good,	None,	-
W. G. Cady & Co,	1	Good,	None,	-
W. G. Cady, Holden street,	1	Fair,	New cable,	Complied.
Windsor Print Co.,	6	Good,	None,	-
Wilkinson & Bliss.,	1	Good,	None,	-
Johnson Mfg. Co.,	3	Good,	None,	-

* Four good; one bad.

Report of Elevators Inspected.

District No. 8. EDWARD B. PUTNAM, *Inspector.*

Name of Building.	No. of Elevators.	Condition.	Orders Given.	Compliances.
Abington.				
Cobb & Thompson,	1	Good,	None,	-
Lewis A. Crossett,	1	Good,	None,	-
M. N. Arnold & Co.,	2	Fair,	Adjust hoisting gear, both elevators.	Complied.
W. S. O'Brien,	1	Good,	None,	-

Digitized by Google

Report of Elevators Inspected — Continued.

Name of Building.	No. of Elevators.	Condition.	Orders Given.	Compliances.
Braintree.				
D. B. Closson & Co.,	1	Good,	None,	-
Williams & Kneeland,	1	Fair,	New cable,	Complied.
Bridgewater.				
Bridgewater Box Co.,	1	Good,	None,	-
W. H. McElwain & Co.,	1	Good,	None,	-
Brockton.				
S. E. Packard & Son,	1	Good,	None,	-
George E. Keith Co., Factory No. 2.	1	Good,	None,	-
Woodward & Wright,	1	Good,	None,	-
E. E. Taylor & Co.,	1	Good,	None,	-
Brockton Co-operative Shoe Co.	1	Good,	None,	-
P. B. Keith,	2	Good,	None,	-
Whitman & Keith,	1	Good,	None,	-
Thompson Bros.,	1	Good,	None,	-
R. B. Grover & Co.,	2	Fair,	New cable for elevator No. 2,	Complied.
Monarch Rubber Co.,	1	Good,	None,	-
M. A. Packard & Co.,	2	Good,	None,	-
Charles A. Eaton Co.,	1	Good,	None,	-
Packard & Field,	1	Fair,	New cable,	Complied.
Myron F. Thomas,	2	Good,	None,	-
Charles S. Pierce,	3	Good,	None,	-
Churchill & Alden,	2	Good,	None,	-
A. C. Thompson,	1	Good,	None,	-
Geo. E Keith Co.,	2	Good,	None,	-
F. B. Washburn Co.,	1	Good,	None,	-
F. M. Shaw & Son,	1	Good,	None,	-
Lilly, Brackett Co.,	1	Good,	None,	-
E. M. Low,	1	Good,	None,	-
Nelson Paper Box Co.,	1	Good,	None,	-
A. H. Alger,	1	Good,	None,	-
George G. Snow,	2	Fair,	New cable for elevator No. 2,	Complied.
Stacy, Adams & Co.,	2	Fair,	Adjust hoisting gear elevator No. 1.	Complied.
N. R. Packard & Co.,	2	Good,	Keep shipper rope from rubbing against steam pipe.	Complied.
Brockton Last Co,	1	Good,	None,	-
Howard & Foster,	1	Good,	None,	-
Howard T. Marshall,	3	Good,	None,	-
T. A. Norris Machine Co.,	1	Good,	None,	-
Henry M. Kingman,	1	Fair,	New cable,	Complied.
T. D Barry & Co.,	2	Good,	None,	-
A. M. Herrod,	1	Good,	None,	-
Ware, Lincoln & Thayer,	1	Good,	None,	-
F. E. White & Co.,	1	Good,	None,	-
Thomas White,	1	Bad,	Adjust hoisting gear and guides; attach device for preventing rope from leaving drum.	Complied.
Thomas White,	1	Fair,	New floor to car,	Complied.
Thomas White,	1	Good,	None,	-
Mawhinney Last Co.,	1	Good,	None,	-
L. Frank Woodward,	1	Good,	None,	-
W. L. Douglas Co.,	1	Good,	None,	-
M. P. Clough & Co.,	1	Good,	None,	-
Bouvé, Crawford & Co,	1	Good,	None,	-
Frank E. White,	1	Good,	None,	-
D. S. Packard,	1	Good,	None,	-
O. A. Miller,	1	Good,	None,	-
Field-Hazzard Co.,	1	Fair,	New cable,	Complied.
P. B. Keith,	1	Good,	None,	-
Joyce & Fletcher,	1	Good,	None,	-
Dedham.				
Norfolk Mills,	1	Fair,	Repair safety,	Complied.
Holbrook.				
White-Wilbar Co.,	1	Good,	None,	-

Digitized by Google

Report of Elevators Inspected — Continued.

Name of Building.	No. of Elevators.	Condition.	Orders Given.	Compliances.
Hyde Park.				
Robert Bleakie & Co.,	1	Good,	None,	-
Readville Cotton Mills,	3	Good,	None,	-
John T. Robinson & Co.,	1	Good,	None,	-
Brainerd Milling Machine Co.,	2	Good,	None,	-
Edward I. Seavey,	1	Bad,	Adjust gear; rail well,	-
Kingston.				
Cobb & Drew,	2	Good,	None,	-
Medfield.				
Edwin V. Mitchell & Co.,	1	Good,	None,	-
Middleborough.				
Murdock Parlor Grate Co.,	1	Bad,	New cable; repair gates,	Complied.
Hathaway, Soule & Harrington.	1	Fair,	New cable,	Complied.
Clark & Cole,	1	Good,	None,	-
Leonard, Shaw & Dean,	1	Good,	None,	-
Leonard & Barrows,	1	Good,	None,	-
Norwood.				
H. M Plympton & Co.,	2	Good,	None,	-
Norwood Press Bindery,	1	Good,	None,	-
John N. Ball,	1	Good,	None,	-
Plymouth.				
Plymouth Cordage Co.,	1	Good,	None,	-
Plymouth Stove Foundry,	1	Good,	None,	-
Quincy.				
Tubular Rivet & Stud Co.,	2	Good,	None,	-
Randolph.				
Richards & Brennan,	1	Good,	None,	-
Bradley, Hagney & Leonard,	1	Good,	None,	-
Charles Doughty,	1	Good,	None,	-
Randolph Power Co,	1	Good,	None,	-
Haggerty & Sullivan,	1	Good,	None,	-
Tileston Bros. Shoe Co.,	1	Good,	None,	-
Rockland.				
The Rockland Co.,	1	Good,	None,	-
Nesmith Box Co.,	1	Good,	None,	-
French, Schriner & Urner,	1	Good,	None,	-
E T. Wright & Co.,	1	Good,	None,	-
George W. Hall,	1	Good,	None,	-
Rice & Hutchins,	1	Good,	None,	-
Gideon Studley,	1	Good,	None,	-
Stoughton.				
J. & H. Fitzpatrick,	1	Good,	None,	-
Wales French Shoe Co.,	1	Good,	None,	-
George E. Belcher,	1	Good,	None,	-
Charles Tenney,	1	Good,	Keep entrances closed,	Complied.
J. G. Phinney Counter Co.,	1	Good,	None,	-
Walpole.				
Union Sand Paper Co.,	1	Good,	None,	-
Bradford, Lewis & Son,	3	Good,	None,	-
Weymouth.				
H. B. Reed & Co.,	1	Good,	None,	-
Strong & Garfield Co.,	1	Good,	Box or rail hoisting gear,	Complied.
Edwin Clapp,	1	Good,	None,	-
E. H. Stetson & Co.,	1	Good,	None,	-
Geo. H. Bicknell,	1	Good,	None,	-
M. C. Dizer & Co.,	3	Good,	None,	-
A. O. Crawford & Co.,	1	Good,	None,	-
East Weymouth Wool Scouring Mill.	1	Good,	None,	-
Torrey, Curtis & Tirrell,	1	Fair,	New cable,	Complied.

Digitized by Google

Report of Elevators Inspected — Continued.

Name of Building.	No. of Elevators.	Condition.	Orders Given.	Compliances.
Whitman.				
U. S. Shoe Co.,	1	Good,	None,	-
L. C. Bliss & Co.,	1	Good,	None,	-
Old Colony Shoe Co.,	1	Good,	None,	-
Commonwealth Shoe & Leather Co.	4	Good,	None,	-
D. B. Gurney,	1	Good,	None,	-
Jenkins Bros.,	1	Good,	None,	-

Report of Elevators Inspected.

District No. 9. JOHN J. SHEEHAN, *Inspector.*

Name of Building.	No. of Elevators.	Condition.	Orders Given.	Compliances.
Amesbury.				
Hamilton Woolen Co.,	7	Good,	None,	-
Merrimac Hat Co.,	1	Good,	None,	-
Biddle & Smart,	1	Poor,	Provide new cable for elevator,	Complied.
Currier & Cameron,	1	Good,	None,	-
Briggs Carriage Co.,	2	Good,	None,	-
Beverly.				
Beverly Building Association,	4	Good,	None,	-
Beverly Building Association,	1	Poor,	Provide new pulley for belt and repair hoisting machinery.	Complied.
Cornelius Murphy,	2	Good,	None,	-
Frank Woodberry,	1	Good,	None,	-
George H. Allen,	1	Good,	None,	-
Myron Woodbury,	1	Poor,	Repair hoisting machinery and safety device on car.	Complied.
Bay State Shoe Co.,	1	Good,	None,	-
Solon Lovett,	1	Good,	None,	-
Perry & Wood,	1	Good,	None,	-
W. A. Lefavour,	1	Good,	None,	-
J. H. Baker,	1	Good,	None,	-
J. A. Wallis & Co,	1	Good,	None,	-
R. E. Larcom,	1	Good,	None,	-
Bradford.				
Island Park Co.,	3	Good,	None,	-
Danvers.				
W. H Burns,	1	Good,	None,	-
George Plumer & Co.,	1	Good,	None,	-
Georgetown.				
G. W. Chaplin & Co.,	1	Good,	None,	-
Pentucket Shoe Co.,	1	Poor,	Repair ratchets on the sides of elevator well.	Complied.
Tenney & Son,	1	Good,	None,	-
Groveland.				
Veasey & Hale,	2	Good,	None,	-
Gloucester.				
Net & Twine Co.,	1	Good,	None,	-
Marchant Box Co.,	1	Good,	None,	-
Russia Cement Co,	1	Good,	None,	-
Cape Ann Shoe Co.,	1	Good,	None,	-
Haverhill.				
A. H. Adams,	1	Good,	None,	-
C. T. Morse,	1	Good,	None,	-

Digitized by Google

Report of Elevators Inspected — Continued.

Name of Building.	No. of Elevators.	Condition.	Orders Given.	Compliances.
Haverhill — Con.				
J. H. Durgin,	2	Good,	None,	-
J. H. Durgin,	1	Poor,	Provide new cable for elevator,	Complied.
H. H. Gilman,	1	Poor,	Provide new cable for elevator,	Complied.
E. F. Hatch,	2	Good,	None,	-
E. F. Hatch,	1	Poor,	Provide new cable for elevator,	Complied.
John B. Nichols,	2	Good,	None,	-
John Pilling,	1	Good,	None,	-
Elijah Fox,	1	Good,	None,	-
E. P. Gardner,	1	Poor,	Provide new cable for elevator; repair safety device on car.	Complied.
Hazen B. Goodrich,	2	Good,	None,	-
Hazen B. Goodrich,	1	Poor,	Provide new cable for elevator,	Complied.
C. P. Bullen,	2	Good,	None,	-
C. P. Bullen,	1	Poor,	Provide new pulleys and belts to operate elevator.	Complied.
W. A. Taylor,	1	Good,	None,	-
Alphens Currier,	1	Good,	None,	-
John A. Gale,	1	Poor,	Provide new belts to operate elevator; oil and clean the same.	Complied.
C. H. Hayes,	3	Good,	None,	-
D. J. Kennedy,	3	Good,	None,	-
D. J. Kennedy,	1	Poor,	Provide new cable for elevator; repair hoisting machinery.	Complied.
Gale Shoe Mfg. Co.,	1	Good,	None,	-
Gardner Bros.,	1	Good,	Guard elevator well on three floors.	Complied.
Stevens & Co.,	3	Good,	None,	-
C. W. Arnold,	3	Good,	None,	-
Harry Tapley,	1	Poor,	Provide new cable for elevator,	Complied.
William Jowett,	1	Good,	None,	-
William Jowett,	1	Poor,	Provide new cable for elevator,	Complied.
Thomas W. Arnold,	1	Good,	None,	-
Thomas W. Arnold,	1	Poor,	Repair hoisting machinery,	Complied.
J. H. Winchell & Co.,	2	Good,	None,	-
Chick Bros.,	1	Good,	None,	-
John Owens,	1	Good,	None,	-
W. B. Thom,	2	Good,	None,	-
John W. Russ,	2	Good,	None,	-
Spaulding & Swett,	1	Poor,	Provide new pulley for shipper; belt and repair hoisting machinery.	Complied.
W. W Spaulding,	1	Good,	None,	-
A. P. Jaques,	1	Good,	None,	-
J. D Newcomb,	1	Good,	None,	-
C. N. Hoyt,	2	Good,	None,	-
Chase & Laubham,	1	Good,	None,	-
Tilton & Bragg,	1	Good,	None,	-
J. B. Swett,	1	Good,	None,	-
Levi Taylor,	1	Poor,	Provide new cable for elevator; adjust hoisting machinery.	Complied.
Ipswich.				
Ipswich Mills Co.,	4	Good,	None,	-
Ipswich Mills Co.,	1	Poor,	Adjust hoisting cable and machinery.	Complied.
Millett & Woodbury,	1	Good,	None,	-
Lynn.				
Henry A. Pevear,	1	Good,	None,	-
Henry A. Pevear,	1	Poor,	Provide new cable for elevator; adjust hoisting machinery.	Complied.
A. F. Smith,	1	Poor,	Provide two new cables for elevator.	Complied.
Hemingway Bros,	1	Good,	None,	-
Chas. B. Tebbetts,	1	Poor,	Adjust hoisting cable; repair safety device on car.	Complied.
J. C. Bennett,	4	Good,	None,	-
Frank Spaulding,	1	Good,	None,	-
Skinner & Scott,	1	Poor,	Provide new cable for elevator,	Complied.
Harney Bros.,	1	Good,	None,	-
Harney Bros.,	1	Poor,	Provide new cable for elevator,	Complied.
A. B. Hoffman,	1	Good,	None,	-
J. B. Renton,	2	Good,	None,	-

Digitized by Google

Report of Elevators Inspected — Continued.

Name of Building.	No. of Elevators.	Condition.	Orders Given.	Compliances.
Lynn — Con.				
J. B. Renton,	1	Poor,	Adjust hoisting machinery; guard elevator well on every floor.	Complied.
Russell & Co.,	1	Good,	None,	-
Walter S. Dickson,	1	Poor,	Provide new cable for elevator,	Complied.
Strout Bros,	3	Good,	None,	-
Strout Bros,	1	Poor,	Provide new cable for elevator,	Complied.
B. P. McGrane,	1	Good,	None,	-
Silsbee & Baker,	1	Good,	None,	-
Edw. Heffernan,	2	Good,	None,	-
G. K. & H. A. Pevear,	3	Good,	None,	-
Joseph G. Brown,	1	Poor,	Provide new cable for elevator,	Complied.
George H. Breed,	1	Good,	None,	-
Bennett & Moulton,	1	Poor,	Provide new cable for elevator.	Complied.
Charles Buffum,	1	Good,	None,	-
Lucien Newhall,	1	Good,	None,	-
Blake Estate,	1	Good,	None,	-
Micajah Butman,	1	Good,	None,	-
E. E. Elder,	4	Good,	None,	-
S. N. Breed,	6	Good,	None,	-
S. N. Breed,	3	Good,	Provide new cables for elevators Nos. 3 and 4; adjust hoisting machinery of elevator No. 5.	Complied.
Littlefield & Plummer,	5	Good,	None,	-
Nathan Breed,	1	Good,	None,	-
Potter & Blanchard,	1	Good,	None,	-
Parker Bros.,	1	Good,	None,	-
George H. Allen,	1	Good,	None,	-
George E. Barnard,	3	Good,	None,	-
James O. Marshall,	1	Poor,	Provide new cable for elevator.	Complied.
Southworth & Campbell,	1	Good,	None,	-
A. B. Martin,	2	Poor,	Provide new shipper ropes for elevator No. 1; repair safety device and adjust hoisting machinery of elevator No. 2; repair tin work on the inside of elevator well.	Complied.
J. B. Thomas,	2	Good,	None,	-
George W. Harnden,	1	Good,	None,	-
Duffy & Oulton,	1	Good,	None,	-
General Electric Co.,	7	Good,	None,	-
Marblehead.				
Marblehead Building Asso.,	2	Poor,	Provide new cable for elevator.	-
Middleton.				
Middleton Paper Co.,	1	Good,	Guard elevator well,	Complied.
Newburyport.				
Bay State Cordage Co.,	2	Good,	None,	-
Edward F. Coffin,	1	Good,	None,	-
W. B. Thom,	1	Good,	None,	-
Towle Mfg. Co.,	1	Good,	None,	-
E. P. Dodge & Co.,	3	Good,	None,	-
Newburyport Shoe Co.,	1	Good,	None,	-
Peabody.				
R. G. Nelson,	1	Good,	None,	-
John A. Lord,	2	Good,	None,	-
George J. Winchester,	1	Good,	None,	-
T. B. Southwick,	1	Good,	None,	-
J. S. Crehore,	1	Good,	None,	-
A. B. Clark,	2	Good,	None,	-
Franklin Osborne Co.,	2	Good,	None,	-
Armstrong Leather Co.,	1	Good,	None,	-
Standard Thermometer Co.,	1	Good,	None,	-

Digitized by Google

Report of Elevators Inspected — Continued.

Name of Building.	No. of Elevators	Condition.	Orders Given.	Compliances.
Salem.				
Warren Page & Co.,	2	Good,	None,	-
Zina Goodell,	1	Good,	None,	-
Chas. S. Fuller & Co.,	1	Good,	None,	-
Atlantic Glue Co.,	1	Good,	None,	-
I. P. Harris,	1	Good,	None,	-
George L. Newcomb,	1	Poor,	Provide new cable for elevator; repair safety device on car; guard elevator well on second, third and fourth floors.	Complied.
West India Fibre Co.,	1	Good,	None,	-
Devlin Bros.,	2	Good,	None,	-
J. A. Dane & Co.,	1	Good,	None,	-
Peter Sim & Sons,	2	Good,	None,	-
Salem Building Association,	2	Good,	None,	-
George D. Putnam,	1	Good,	None,	-
Robert Riley,	1	Good,	None,	-
W. F. Martin,	1	Good,	None,	-
Naumkeag Steam Cotton Co.,	10	Good,	None,	-
Hamilton & Balcomb,	3	Good,	None,	-
Henry Harrington,	1	Good,	None,	-
Charles Harrington,	1	Good,	None,	-
B. J. Mulligan,	2	Good,	None,	-

Report of Elevators Inspected.

District No. 10. CHAS. A. DAM, *Inspector.*

Name of Building.	No. of Elevators.	Condition.	Orders Given.	Compliances.
Colrain.				
Griswoldville Mfg. Co., No. 2 Mill.	1	Fair,	Repair gate,	Complied.
Dalton.				
Dalton Shoe Co.,	1	Good,	Guard elevator well,	Complied.
Renfrew Mfg. Co., No. 4 Mill,	1	Fair,	Keep elevator gates closed,	Complied.
North Adams.				
Greylock Mills,	1	Good,	Provide new cable,	Complied.
Canedy, Clark Shoe Co.,	1	Good,	Place sheave pulley in proper position.	Complied.
Rice & McMillan,	1	Good,	Keep doors closed,	Complied.

Report of Elevators Inspected.

District No. 11. FRANK C. WASLEY, *Inspector.*

Name of Building.	No. of Elevators.	Condition.	Orders Given.	Compliances.
Lowell.				
Lowell Milk Asso.,	1	Good,	None,	-
City of Lowell,	1	Good,	None,	-
C. E. Gee,	1	Good,	None,	-
J. S Jaques Shuttle Co.,	1	Good,	None,	-
Faulkner Mills,	1	Good,	None,	-
Lamson C. S. Mills,	1	Poor,	Adjust safety device on Whittier elevator.	Complied.
Mohair Plush Co.,	1	Good,	None,	-
J. C. Ayers Co.,	1	Good,	None,	-
Lowell Mfg. Co.,	8	Good,	None,	-

Digitized by Google

Report of Elevators Inspected — Concluded.

Name of Building.	No. of Elevators.	Condition.	Orders Given.	Compliances.
Lowell — Con.				
John Pillings,	1	Good,	None,	-
Boott Cotton Mills,	18	Good,	None,	-
Swift & Bailey,	1	Good,	None,	-
A. Pratt,	1	Good,	None,	-
Appleton Mills,	4	Good,	None,	-
U. S. Cartridge Co.,	1	Good,	None,	-
Geo. L. Cady,	1	Good,	None,	-
S. K. Dexter,	1	Good,	None,	-
Gates' Estate,	2	Good,	None,	-
Lowell Bleachery Co.,	4	Good,	None,	-
White Bros. & Co.,	5	Good,	None,	-
Merrimack Mfg. Co.,	20	Good,	None,	-
Coburn Shuttle Co.,	2	Good,	None,	-
Lawrence Mfg Co.,	12	Good,	None,	-
Mass. Mohair Plush Co.,	1	Good,	None,	-
Sterling Mills,	2	Good,	None,	-
Tremont & Suffolk,	17	Good,	None,	-
Fay Bros. & Hosford,	1	Good,	None,	-
Harvard Brewing Co.,	3	Good,	None,	-
Mass. Cotton Mills,	17	Good,	None,	-
C. I. Hood & Co.,	1	Good,	None,	-
C. I. Hood & Co.,	1	Poor,	Adjust safety device,	Complied.
F. S. Perkins,	1	Good,	None,	-
Hamilton Mfg. Co,	17	Good,	Guard two elevator well holes, No. 5 mill.	Complied.
Lawrence.				
Lawrence Gas Co.,	1	Good,	None,	-
Monroe Felt & Paper Co.,	1	Good,	None,	-
Arlington Mills,	1	Poor,	Adjust safety device,	Complied.
Arlington Mills,	1	Poor,	Adjust safety device,	Complied.
Arlington Mills,	4	Good,	None,	-
Robert Carruthers,	1	Good,	None,	-
E. M. Slayton & Co.,	1	Good,	None,	-
Lawrence Duck Co.,	4	Good,	None,	-
Lawrence Duck Co.,	1	Poor,	Adjust safety device,	Complied.
Samuel Smith,	1	Good,	None,	-
Everett Mills,	8	Good,	None,	-
Pemberton Co.,	7	Good,	None,	-
E. Frank Lewis,	1	Good,	None,	-
Arlington Co-operative Asso.,	1	Good,	None,	-
Cold Spring Brewery Co,	1	Good,	None,	-
Atlantic Cotton Mill,	5	Good,	None,	-
Russell Mill,	5	Good,	None,	-
Kress Bros.,	1	Good,	None,	-
G. H. Hadley & Co.,	1	Good,	None,	-
Leland Belting Co.,	1	Good,	None,	-
Washington Mills,	12	Good,	None,	-
John Bingham,	1	Good,	None,	-
Pacific Mills,	18	Good,	None,	-
North Andover.				
M. L. Stevens & Son,	2	Good,	None,	-
Brightwood Mfg. Co.,	1	Good,	None,	-
M. T. Stevens Mill,	2	Good,	None,	-
Andover.				
Tyer Rubber Co.,	1	Good,	None,	-
North Chelmsford.				
G. C. Moore,	2	Good,	None,	-
North Billerica.				
Talbot Chemical Co.,	1	Good,	None,	-
Faulkner Mills,	1	Good,	None,	-
West Chelmsford.				
Brown & Craven,	1	Good,	None,	-
Westford.				
G. C. Moore,	1	Good,	None,	-
Methuen.				
Methuen Co.,	5	Good,	None,	-

Digitized by Google

Inspectors' Reports of Clothing made in Tenement-houses and Workshops.

Report of Inspector Griffin.

Sir: — I transmit herewith my annual report for the year ending Oct. 1, 1898.

In last year's report we attempted to point out the weakness of the sweating law, so called, as it then existed, with the result that the Legislature amended it to meet with our suggestions. The wisdom of this amendment has manifested itself in many ways. It has obliged the proprietors of shops to be more careful whom they select to distribute their work to the home makers in their absence. It prevents the establishment of small tenement-house workshops, whose proprietors could formerly evade the law under the plea of custom makers. It has made positive the fact that wearing apparel for the public use shall not be made in tenement or dwelling houses, except by the members of the family dwelling therein, and then only when their apartments are kept in a cleanly condition, and they have first procured a permit and given the name of their employer, so that, in case of any infectious or contagious disease, the garments may be properly disinfected and the owner notified. It has removed the technicalities that made the law so ridiculous, and almost impossible of securing a conviction under.

While it has been improved in those respects, it has in no way tended to increase the wages of the employees in the trade, neither has it or can it prevent the shipment of clothing to be made in New York, — two things probably of more interest to those engaged in the various branches of the clothing industry than the advantage and safety to the public in having their clothing made under healthful conditions. The prices paid for manufacturing, instead of increasing, have gradually decreased during the year, and the amount of clothing made in New York has not diminished. These two facts, however, must be remedied, if at all, by the combined efforts of the workers themselves, with the assistance of a vigorous public agitation. The clothing dealer makes the best contract that he can with the party who engages to do his work, the only question being asked is whether he has a shop, and its location. These shops are in themselves the embodiment of, and their proprietors the originators of, the sweating system, their one idea being the getting of as much as they can from the wholesale dealer, and giving as little as possible to their employees. Among the proprietors of these shops, otherwise known as contractors,

Digitized by Google

great competition exists; for, if one of them should ask an increase in the prices paid, it is a very easy matter for the dealer to divert the work to another or yet cheaper applicant, on account of the eagerness they evince to secure their neighbors' work, possibly with the expectation that in time they may obtain a better price, which very rarely if ever happens. With the poor help it would appear that there is no restriction in prices paid except the limit of human endurance and the necessity of earning a certain amount of money for the purpose of sustaining life. We can support this statement by facts in our possession, which prove that to-day respectable women in reduced circumstances, through sickness or non-employment, become a prey of unscrupulous employers, who, taking advantage of their poverty, pay them such prices as follows: for making children's dresses, 25 cents per dozen; for women's aprons, 15 cents per dozen; for women's wrappers, 75 cents per dozen; for boys' knee pants, 40 cents per dozen. It is interesting to note that a movement has been started in Boston, New York and other large cities, by representative women of means and social position, called the Consumers' League, whose object is to improve the conditions of those of their sex less favored than themselves, and by public agitation and private influence demand for them at least a living wage for their labor. Such a movement should call for the tolerant judgment, help and co-operation of all men and women. It is a serious undertaking. Let us hope that the results may reach the desired end.

The tenement-house work by private families remains about the same as last year. The conditions must of necessity vary greatly. Many tenements we find in first-class condition, and a license is granted; others are tolerably clean, but when granted a license require constant visits; others are filthy in the extreme, and are refused a license.

The number of cases of diphtheria and scarlet-fever in houses where wearing apparel was being made was only ten during the year, — 49 less than last year, and the smallest number of cases since introduction of the sweating law.

The filthy condition of the water-closets in many of the tailor shops has been a constant source of irritation to the inspector. No matter how many times the owners are obliged to clean them, upon the next visit of the inspector they are found in the same dirty condition, and in many cases it would appear to be done designedly by the employees. In many cases the merchants who employ these people have been notified and have stopped giving them work, and for a time great improvement would result; but after a few months they again fall into their filthy habits. If the

Digitized by Google

clothing merchants were prohibited from sending work into any shop unless the proprietor held a State certificate, we could surely and easily compel them to keep clean.

On account of the scarcity of work in the clothing industry, many of the shops have been found closed upon the visit by the inspector, and few attempts have been made to violate the fifty-eight hour law, although many of the time tables have been torn down or lost in moving.

The cases where children were found working without certificates would appear to be from ignorance of the law upon the part of the employer, and in all cases they were immediately secured upon our demand.

A summary of the work done during the year is appended: —

Number of licenses outstanding Oct. 1, 1897,	426
Number of licenses granted during the year,	164
Number of licenses revoked during the year,	109
Number of licenses outstanding Oct 1, 1898,	481
Number of licenses refused during the year,	106
Number of licenses renewed during the year,	106
Number of tenements inspected during the year,	485
Number of visits to licensed and unlicensed tenements during the year,	554
Total number of tenements inspected and visited during the year,	1,039
Number of workshops inspected during the year,	112
Number of visits to workshops during the year,	143
Number of orders issued,	83
Number of compliances,	81
Number of children between thirteen and fourteen years of age,	–
Number of children between fourteen and sixteen years of age,	26
Number of males employed,	914
Number of females employed,	883
Total number of males and females employed,	1,797

Digitized by Google

SPECIAL DUTY, ... JOHN E. GRIFFIN, *Inspector*.

NAME OF FACTORY OR WORKSHOP.	Goods Manufactured.	Number Employed.				Sanitary Condition.	Orders Given.	Compliances.
		Males.	Females.	Under 14.	14 to 16.			
BOSTON.								
Herman Sideman,	Mackintoshes,	3	1	–	–	Fair,	Designate and clean water-closets,	Complied.
M. Barron,	Coats,	17	9	–	–	Fair,	Designate and clean water-closets,	Complied.
L. Arkon,	Trousers,	11	11	–	–	Fair,	Designate and clean water-closets,	Complied.
Lemer & Mogalesky,	Vests,	4	3	–	–	Fair,	Designate and clean water-closets,	Complied.
I. Smith,	Trousers,	14	14	–	–	Fair,	Designate and clean water-closets,	Complied.
Cohen & Wanston,	Trousers,	6	8	–	–	Fair,	Designate and clean water-closets,	Complied.
Holmes & Kimball,	Clothing,	10	25	–	–	Good,	None,	–
S Loomis,	Clothing,	5	10	–	–	Good,	None,	–
Ora D. Shaw,	Caps,	4	4	–	3	Good,	Obtain certificates for minors,	Complied.
David Morganstein,	Coats,	8	5	–	–	Bad,	Designate and clean water-closets; keep workshop clean; post time table; guard belting, shafting and electric motor.	Gone out of business.
Mrs. R. Solomon,	Ladies' garments,	2	4	–	–	Fair,	Post time table,	Complied.
Domenico Carderella,	Custom clothing,	5	–	–	–	Fair,	None,	–
Morris Rosenthal,	Trousers,	2	–	–	–	Fair,	None,	–
Philip Lofchgee,	Trousers,	7	9	–	–	Bad,	Clean shop, stairs, entry and water-closets.	Complied.
B. Wolfson,	Boys' knee pants,	3	1	–	–	Bad,	Clean shop, stairs, entry and water-closets.	Complied.
S. Steinberg,	Trousers,	5	6	–	–	Bad,	Clean shop, stairs, entry and water-closets.	Complied.

Digitized by Google

C. Malgeri,	Trousers,	4	5	–	–	Bad,	Clean shop, stairs, entry and water-closets; post time table.	Complied.
L. Zwick,	Children's jackets,	6	6	–	–	Bad,	Clean shop, stairs, entry and water-closets.	Complied.
M. Yeretsky,	Coats,	12	6	–	–	Fair,	Repair, paint and limewash water-closets.	Complied.
I. Levy,	Trousers,	3	6	–	–	Fair,	Guard shafting,	Complied.
S. Alexander,	Coats,	18	17	–	–	Fair,	None,	–
D. Nurenberg,	Coats,	9	11	–	–	Fair,	Paint, limewash water-closets and keep them clean.	Complied.
L. Cohen,	Coats,	9	6	–	–	Fair,	None,	–
S. Elman,	Vests,	6	6	–	2	Poor,	Limewash and clean shop; obtain certificates for minors; post time table.	Complied.
P. J. Riley,	Coats,	2	15	–	–	Good,	None,	–
Abrams & Sandler,	Vests,	11	2	–	–	Poor,	Clean stairs and workshop; post time table.	Complied.
P. Losowski,	Coats,	10	6	–	–	Good,	None,	–
Standard Overall Mfg. Co.,	Overalls,	3	20	–	–	Good,	Designate water-closets; post time table.	Complied.
N. Tigner,	Coats,	3	4	–	–	Poor,	Limewash and designate water-closets.	Complied.
M. W. Buchinsky,	Coats,	15	5	–	–	Fair,	None,	–
Wm. Yuskowski,	Coats,	37	15	–	–	Fair,	None,	–
Finklestein, Taylor & Co.,	Trousers,	12	7	–	–	Fair,	Post time table,	Complied.
T. Gioiosa,	Coats,	30	12	–	–	Good,	Guard shafting,	Complied.
J. Shannahofski,	Vests,	10	11	–	1	Good,	Obtain certificate for minor; guard shafting.	Complied.
J. Baker,	Coats,	17	10	–	–	Good,	None,	–
Myer Cohen,	Coats,	13	6	–	–	Fair,	None,	–
Max Swartz,	Coats,	5	4	–	–	Fair,	None,	–

Digitized by Google

SPECIAL DUTY, JOHN E. GRIFFIN, *Inspector — Continued.*

NAME OF FACTORY OR WORKSHOP.	Goods Manufactured.	Number Employed.				Sanitary Condition.	Orders Given.	Compliances.
		Males.	Females.	Under 14.	14 to 16.			
BOSTON — *Continued.*								
H. Keshenofski,	Knee pants,	8	5	–	–	Fair,	None,	–
Spector & Banatt,	Coats,	9	6	–	–	Fair,	None,	–
Jos. Frederica,	Coats,	15	10	–	–	Fair,	None,	–
R. D Pees,	Coats,	14	10	–	–	Fair,	None,	–
F. M. Inman & Co.,	Coats,	18	20	–	–	Good,	Post time table; guard belting,	Complied.
S. Bronski,	Coats,	12	8	–	1	Fair,	Obtain certificate for minor; guard shafting.	Complied.
Novelty Cloak Co.,	Ladies' garments,	5	17	–	–	Fair,	Post time table; guard shafting and belting; designate water-closets.	Complied.
John Latham,	Trousers,	4	26	–	–	Fair,	None,	–
Kirshen & Erlberg,	Trousers,	11	8	–	–	Fair,	None,	–
Aronson & Koppel,	Coats,	9	5	–	–	Poor,	Clean stairs, entry, shop and water-closets; post time table.	Complied.
N. Aronson,	Ladies' garments,	2	16	–	–	Fair,	None,	–
Maraniss & Huberman,	Mackintoshes,	5	3	–	–	Fair,	None,	–
W. Berger,	Ladies' garments,	1	12	–	–	Fair,	None,	–
I. Freedman,	Trousers,	15	20	–	–	Fair,	None,	–
Becker & Carp,	Vests,	11	12	–	1	Fair,	None,	–
Brown & Gilstein,	Vests,	12	18	–	2	Fair,	None,	–
H. Newman,	Trousers,	8	4	–	1	Fair,	None,	–
B. Rosofsky,	Coats,	3	–	–	–	Fair,	None,	–
M. Silverman,	Clothing,	2	–	–	–	Fair,	None,	–

Digitized by Google

M. Goldberg,	Coats,	8	3	–	–	Fair,	Post time table,	Complied.
Lemer & Mogalesky,	Vests,	6	5	–	–	Fair,	None,	–
A. Basile,	Coats,	6	3	–	–	Fair,	None,	–
S. Levy,	Buttonhole maker,	1	2	–	–	Fair,	None,	–
J. Weinstein,	Trousers,	7	3	–	–	Fair,	Post time table,	Complied.
Lavine & Levy,	Trousers,	13	13	–	–	Fair,	Post time table,	Complied.
J. Muscowitz,	Vests,	7	7	–	–	Fair,	None,	–
S. Cabelinsky,	Overalls,	4	10	–	–	Fair,	Clean and designate water-closets; post time table.	Complied.
Annie Cohen,	Vests,	2	2	–	–	Poor,	Clean shop and water-closets,	Complied.
B. Frankel,	Overalls,	1	3	–	–	Poor,	Clean and designate closets; post time table.	Complied.
John Hemmerdniger,	Knee pants,	10	12	–	1	Fair,	Obtain certificate for minor; clean water-closets.	Complied.
Louis Hoffman,	Vests,	3	3	–	–	Fair,	Clean water-closets,	Complied.
H R. Barry,	Ladies' and children's garments.	1	8	–	–	Good,	None,	–
American Mfg. Co.,	Ladies' garments,	1	20	–	–	Good,	None,	–
McKean Mfg. Co.,	Ladies' garments,	1	4	–	–	Fair,	None,	–
Nathan Simons,	Trousers,	9	8	–	3	Fair,	Obtain certificates for minors,	Complied.
L. Baw,	Trousers,	7	8	–	–	Fair,	None,	–
Greenberg & Rosenberg,	Vests,	4	4	–	–	Fair,	Post time table,	Complied.
M. Goldstein,	Trousers,	14	8	–	–	Fair,	None,	–
J. Lanes,	Trousers,	12	7	–	–	Fair,	None,	–
S. Levy,	Ladies' garments,	1	–	–	–	Poor,	Clean workshop,	Complied.
I. L. King,	Coats,	11	9	–	1	Fair,	None,	–
W. Taculowski & Co.,	Coats,	20	6	–	–	Poor,	Supply and designate water-closets; post time table.	Complied.
Abrams & Co.,	Vests,	7	4	–	–	Poor,	Supply and designate water-closets; post time table	Complied.

Digitized by Google

SPECIAL DUTY, JOHN E. GRIFFIN, *Inspector — Concluded.*

NAME OF FACTORY OR WORKSHOP.	Goods Manufactured.	Number Employed.				Sanitary Condition.	Orders Given.	Compliances.
		Males.	Females.	Under 14.	14 to 16.			
BOSTON — *Concluded.*								
L. Borovsky,	Coats,	20	9	–	–	Fair,	Clean, repair and designate water-closets.	Complied.
A. Balcon,	Coats,	13	12	–	–	Fair,	None,	–
D. Harris,	Coats,	27	16	–	1	Poor,	Keep stairs, entry and workshop clean.	Complied.
L. Gaetain,	Coats,	21	10	–	4	Poor,	Clean stairs, entry and shop; repair men's closets; obtain certificates for minors.	Complied.
J. Wiltrakis,	Coats,	22	8	–	–	Poor,	Supply and designate water-closets; post time table.	Complied.
Adler & Waxer,	Coats,	7	7	–	–	Fair,	None,	–
A. Kadetsky,	Coats,	10	4	–	–	Fair,	None,	–
A. Bloom,	Coats,	12	8	–	–	Fair,	None,	–
Anthony Yarosh,	Buttonhole maker,	1	–	–	1	Fair,	Obtain certificate for minor,	Complied.
Rush & Kronberg,	Coats,	5	3	–	–	Fair,	None,	–
L. Gold,	Coats,	5	4	–	–	Fair,	None,	–
D. Marks,	Coats,	20	10	–	–	Fair,	None,	–
S. Moore,	Trousers,	6	8	–	–	Good,	None,	–
R. L. Videtto,	Vests,	4	16	–	–	Good,	None,	–
Proctor & Damon,	Ladies' skirts and aprons.	2	8	–	–	Good,	None,	–
J. F. Lynch,	Custom clothing,	4	3	–	–	Fair,	Post time table,	Complied.

Digitized by Google

H. J. Kramer & Co.,	Shirt waists,	5	35	–	3	Fair,	Obtain certificates for minors; build partition higher separating closets.	Partly complied.
Hub Mfg. Co.,	Bathing suits, etc.,	2	15	–	–	Good,	Guard shafting,	Complied.
H. Aronson,	Coats,	17	9	–	1	Fair,	Clean water-closets,	Complied.
J. Aronson,	Trousers,	6	3	–	–	Fair,	Clean water-closets,	Complied.
M. Rosenberg,	Trousers,	6	6	–	–	Fair,	Clean water-closets,	Complied.
S. Marcus,	Trousers,	10	4	–	–	Fair,	Clean water-closets,	Complied.
Kate Rogers,	Knee pants,	1	6	–	–	Fair,	Post time table,	Complied.
Louis Finklestein,	Trousers,	5	3	–	–	Poor,	Clean workshop,	Complied.
Adelson & Mittel,	Coats,	9	4	–	–	Poor,	Clean workshop and water-closets; post time table.	Complied.
Jos. Sheinfeld,	Vests,	5	3	–	–	Poor,	Clean workshop,	Complied.
J. Scolpeneti,	Coats,	6	6	–	–	Fair,	None,	–
Levy & Weselo,	Coats,	15	7	–	–	Fair,	None,	–
H. Wilchinsky,	Custom clothing,	2	1	–	–	Poor,	Secure proper workshop,	–*
Kronberg & Bronski,	Coats,	10	10	–	–	Fair,	Supply water-closet,	In process.
S. Fixler,	Custom clothing,	2	1	–	–	Fair,	Post time table,	Complied.
H. Wilchinsky,	Custom clothing,	2	1	–	–	Good,	Post time table,	Complied.

* Tenement-house workshop, abolished.

Digitized by Google

REPORT OF INSPECTOR PLUNKETT.

SIR: — The law relating to the manufacture and sale of clothing made in unhealthy places has been enforced without friction during the year in the district assigned to me. The amendments to the law enacted by the Legislature of the present year, changing its phraseology, have removed all doubt as to the intent of its requirements and greatly increased its effectiveness.

During the year twelve attempts have been made to start shops in tenement-houses in violation of the law, the proprietors being of the opinion that no restriction was placed upon the manufacture of ladies' garments, for which purpose these shops were to be used. However, upon receipt of a copy of the law, they in every case either vacated the premises so occupied or made changes in the shops so as to comply with the requirements of the law.

The fashion in vogue among women, of wearing the so-called tailor-made garments, has introduced into the dressmaking business a large number of men tailors. These men are able to produce a more stylish garment at a greatly reduced labor cost, and are in consequence driving women out of the business. One of the results of this condition of affairs is the large number of small establishments for the manufacture of ladies' garments which have been started during the past few years, in all of which men only are employed. The standard of cleanliness in these shops is far below that to be found in the dressmaking trade, but a strict compliance with the law is exacted in all cases.

The manufacture of men's clothing is now almost entirely carried on in regular workshops, the exception being the finishing of trousers, which to a large extent is still being done in their homes by women who have procured a license for this purpose. This system will probably always prevail, as the finishing or hand work on these garments is the last stage in the process of manufacture prior to final pressing, and, as it requires from two to four finishers to each machine operator, the space required in the shops for the accommodation of a sufficient number of finishers necessitates a greater outlay in rent than these contractors are willing to assume.

In the other branches of the clothing trade, where great improvements in the methods of manufacture have been made, the labor is almost entirely performed in large, well-regulated workshops, under a well-organized system, each individual doing only a portion of the work on the garments; with steam or electricity as a motive power, and at a cost for labor performed in the completion of these garments far below the possibility of competition

Digitized by Google

from home workers. There are a few concerns who manage to have their garments manufactured by women in their homes by paying a small advance upon the factory prices. There is a class of small manufacturers, who, by constantly advertising in the newspapers, succeed in initiating into their employ a large number of women who are anxious to secure employment at home. The applicants for licenses who have answered these advertisements are generally respectable American women, who, through poor circumstances, have been forced to the necessity of seeking employment, but who, after giving the work a fair trial and finding it impossible to gain a livelihood thereby, give up this occupation with discouragement and disgust. Many of the women who attempt to manufacture these garments at home are mothers of small children, and when we reflect that it is possible and indeed frequently the case that a child may be afflicted with a contagious disease for several days without much outward sign, and sometimes in so mild a form as not to sufficiently alarm the parents as to call for medical advice, it occurs to me, in the face of these circumstances, that to compel by law the manufacturers of children's garments, dresses, night gowns and underwear, to have all the labor on these garments performed in regular factories would be but justice to the public, and would be little if any hardship on the so-called home workers. And it would seem that these garments intended to be worn by children of tender years should be manufactured under conditions which should be above even the suspicion of contagion.

The inspection of regular workshops or tailor shops has been an unsatisfactory labor, in consequence of the irregularity of business, through which they have been forced to close up at different periods. When running in full force it becomes necessary to visit these shops frequently, in order to properly enforce the laws in relation to cleanliness of sanitaries, considerable attention having been given in this particular with more gratifying results than in former years.

The law regulating the hours of employment of women and minors has been strictly enforced, very few complaints having been received of its violation; which is an indication of a compliance with its requirements, as the employees in these shops are prone to make complaints which are often groundless.

I have found eleven children employed without the proper certificates, but in each case a certificate was produced after notification, failure to have the same on file being due to carelessness, as in all but one case the child was provided with one which he had neglected to give to the employer.

Digitized by Google

A summary of the work performed is here appended: —

Number of licenses outstanding Oct. 1, 1897,	518
Number of licenses granted during the year,	302
Number of licenses revoked during the year,	176
Number of licenses surrendered during the year,	33
Number of licenses outstanding Oct. 1, 1898,	611
Number of licenses renewed during the year,	80
Number of licenses refused during the year,	35
Number of licenses transferred during the year,	99
Number of tenements inspected during the year,	692
Number of visits to licensed and unlicensed tenements,	528
Total number of tenements visited and inspected during year,	1,220
Number of workshops inspected during the year,	103
Number of visits to workshops during the year,	104
Number of orders issued,	52
Number of compliances,	47
Number of children between thirteen and fourteen years of age,	–
Number of children between fourteen and sixteen years of age,	38
Number of males employed,	867
Number of females employed,	726
Total number males and females,	1,593

Digitized by Google

SPECIAL DUTY, ... JOHN H. PLUNKETT, *Inspector*.

NAME OF FACTORY OR WORKSHOP.	Goods Manufactured.	Number Employed.				Sanitary Condition.	Orders Given.	Compliances.
		Males.	Females.	Under 14.	14 to 16.			
BOSTON.								
P. Levine,	Trousers,	12	5	–	–	Poor,	Designate water-closets,	Complied.
O. Hapsman,	Knee pants,	2	–	–	–	Poor,	Secure workshop,	Complied.
Klein & Freidman,	Vests,	17	18	–	1	Fair,	Certificate for minor,	Complied.
Isaac Brenner,	Coats,	15	8	–	1	Good,	Certificate for minor,	Complied.
Shalahofsky & Finklestein,	Trousers,	9	6	–	–	Poor,	Clean room and closets,	Complied.
M. Dioget,	Knee pants,	2	1	–	–	Poor,	Secure workshop,	Complied.
A. Freidman,	Coats,	7	9	–	2	Poor,	Post time table; furnish additional closet; procure certificate.	Complied.
Segirtofsky & Cohen,	Trousers,	14	13	–	2	Fair,	Procure certificates,	Complied.
A. Cohen,	Coats,	14	7	–	1	Poor,	Furnish additional closet,	Complied.
D. Sneider,	Dresses,	9	5	–	–	Poor,	Post time table; furnish additional closet.	Complied.
M. Fenk,	Underwear,	1	3	–	–	Poor,	Post time table; disconnect shop from living rooms.	Complied.
I. Brenner,	Trousers,	3	4	–	–	Poor,	Clean workrooms,	Complied.
D. Shoenberg,	Coats,	7	3	–	–	Fair,	Clean halls and stairs,	Complied.
Harris & Kondizian,	Coats,	17	9	–	1	Fair,	Post time table; procure certificate for minor.	Complied.
H. Janbol,	Trousers,	3	3	–	1	Fair,	Procure school certificate,	Complied.
J. Rosenberg,	Coats,	43	20	–	2	Fair,	Different arrangement of closets,	Complied.
Boston Knee Pants Co.,	Trousers,	10	9	–	1	Fair,	Procure school certificate,	Complied.

Digitized by Google

SPECIAL DUTY, JOHN H. PLUNKETT, *Inspector — Continued.*

NAME OF FACTORY OR WORKSHOP.	Goods Manufactured.	Number Employed.				Sanitary Condition.	Orders Given.	Compliances.
		Males.	Females.	Under 14.	14 to 16.			
BOSTON — *Continued.*								
Greenberg & Standard,	Coats,	21	5	–	8	Fair,	Procure school certificates,	Complied.
Lieb & Nyman,	Wrappers,	2	2	–	–	Poor,	Disconnect workroom from living room.	Complied.
I. Wisansky,	Children's dresses,	1	1	–	–	Poor,	Disconnect workroom from living room.	Complied.
I. Feldman,	Knee pants,	2	–	–	–	Poor,	Clean room,	Complied.
Spector, Barnott & Openheim,	Coats,	11	5	–	–	Fair,	Post time table,	Complied.
I. Shulman,	Coats,	16	6	–	2	Good,	Procure school certificates,	Complied.
Chas. Ranin,	Dresses,	2	2	–	–	Fair,	Post time table; separate workrooms from living rooms.	Complied.
G. Backer,	Trousers,	5	2	–	–	Poor,	Post time table; clean workroom,	Complied.
J. Sherman,	Coats,	20	12	–	1	Fair,	Procure school certificate,	Complied.
Morris Alpin,	Trousers,	2	1	–	–	Poor,	Secure workshop,	Complied.
Joseph Todis,	Dresses,	1	3	–	–	Poor,	Secure workshop,	Complied.
Bessie Swim,	Vests,	1	9	–	–	Good,	Post time table,	Complied.
H. Levine,	Coats,	21	10	–	1	Fair,	Procure certificate for minor,	Complied.
H. Brenner,	Trousers,	6	2	–	–	Fair,	None,	–
A. Habre,	Trousers,	9	6	–	–	Fair,	None,	–
I. Brodsky,	Cloaks,	2	1	–	–	Poor,	Secure workshop,	Complied.
Sheinfield, Lipman & Light,	Vests,	5	3	–	–	Fair,	None,	–
J. Hushansky,	Trousers,	6	5	–	–	Fair,	None,	–
Cohen & Slovyenski,	Coats,	9	7	–	–	Fair,	None,	–

Digitized by Google

I. Usam,	Vests,	6	5	-	-	Fair,	None,	-
B. Falck,	Trousers,	4	2	-	-	Fair,	None,	-
D. Wasserman,	Trousers,	22	12	-	-	Fair,	None,	-
J. Natinson,	Trousers,	13	17	-	-	Good,	None,	-
Miss Green,	Vests,	-	15	-	-	Good,	None,	-
J. McKie,	Vests,	-	8	-	-	Fair,	None,	-
E. B. Whitten,	Vests,	2	16	-	-	Fair,	None,	-
F. DeMasse,	Coats,	30	15	-	3	Good,	None,	-
Clara E. Mallard,	Vests,	-	10	-	-	Good,	None,	-
Mrs. Wilder,	Vests,	-	5	-	-	Good,	None,	-
Bessie Swim,	Vests,	1	9	-	-	Good,	None,	-
Mrs. M. E. Norton,	Vests,	-	8	-	-	Fair,	None,	-
Evans Bros.,	Vests,	4	13	-	-	Good,	None,	-
Miss Elliot,	Vests,	-	5	-	-	Fair,	None,	-
B. Slipian,	Coats,	17	6	-	1	-	None,	-
Miss M. Cook,	Vests,	1	9	-	-	Fair,	Post time table,	Complied.
J. Kadish,	Vests,	3	1	-	-	Fair,	None,	-
S. Sodofsky,	Trousers,	3	14	-	-	Good,	None,	-
H. Schwartz,	Trousers,	6	4	-	-	Fair,	None,	-
Kowitz & Lisofsky,	Trousers,	11	2	-	-	Fair,	None,	-
S. Levine,	Trousers,	10	3	-	-	Fair,	None,	-
N. Sutzmary,	Coats,	13	3	-	-	Fair,	None,	-
F. Rosenberg,	Trousers,	5	3	-	-	Fair,	None,	-
F. Rosenberg & Co.,	Coats,	24	13	-	2	Fair,	None,	-
L. H. Clark,	Coats,	11	7	-	-	Good,	None,	-
T. Bragen & Mrs. Welck,	Vests and trousers,	2	23	-	-	Good,	None,	-
F. L. Deenn,	Coats,	24	7	-	-	Fair,	None,	-
C Abrams,	Coats,	25	32	-	-	Good,	None,	-
M. Greenbaum,	Coats,	15	13	-	1	Good,	None,	-
Leon Lasserson,	Coats,	25	14	-	-	Good,	None,	-
D. Carderelli,	Coats,	5	-	-	-	Good,	None,	-

Digitized by Google

SPECIAL DUTY, JOHN H. PLUNKETT, *Inspector — Concluded.*

NAME OF FACTORY OR WORKSHOP.	Goods Manufactured.	Number Employed.				Sanitary Condition.	Orders Given.	Compliances.
		Males.	Females.	Under 14.	14 to 16.			
BOSTON — *Concluded.*								
Mrs. Quill,	Coats and vests,	4	7	–	–	Good,	None,	–
Oak Hall Co.,	Clothing,	24	21	–	–	Good,	None,	–
C. J. Anderson,	Coats,	30	7	–	1	Fair,	None,	–
C. J. Tornquest,	Coats,	17	8	–	–	Good,	None,	–
L. Frongello,	Coats,	8	4	–	–	Fair,	None,	–
A. Schwartz,	Coats,	8	3	–	–	Fair,	None,	–
A. Peterson,	Trousers,	3	3	–	–	Fair,	None,	–
A. W. Nelson,	Coats,	6	3	–	–	Fair,	None,	–
J. Neville,	Coats,	8	3	–	–	Fair,	None,	–
H. Ruben,	Coats,	5	3	–	–	Fair,	None,	–
J. Salest,	Coats,	4	2	–	1	Fair,	None,	–
H. Carp,	Coats,	2	1	–	–	Fair,	None,	–
P. Valero,	Coats,	2	1	–	–	Fair,	None,	–
J. Brodsky,	Trousers,	3	3	–	–	Fair,	None,	–
F. H. Hughes,	Trousers,	5	8	–	–	Fair,	None,	–
Barkowetz & Splitt,	Coats,	10	9	–	–	Good,	None,	–
E. Newrenberg,	Coats,	13	19	–	2	Good,	Post time table,	Complied.
J. Matulewecz,	Coats,	2	1	–	–	Good,	Post time table,	Complied.
Geo. Donovan,	Trousers,	4	29	–	–	Fair,	None,	–
Murphy & O'Brien,	Coats,	15	4	–	–	Fair,	None,	–
Aaron Swanson,	Coats,	10	4	–	–	Fair,	None,	–
A. J. McDonald,	Trousers,	2	9	–	–	Fair,	None,	–

Digitized by Google

Geo. R. Niles,	Coats and vests,	11	15	–	–	Good,	None,	–
Simon Levine,	Coats,	4	2	–	–	Fair,	Post time table,	Complied.
Davis & Flambeau,	Trousers,	2	4	–	1	Good,	Post time table,	Complied.
J. M. Murry & Copellman Bros.,	Coats and vests,	7	5	–	1	Good,	Procure certificate,	Complied.
Shalevlsky & Freidman,	Trousers,	10	8	–	1	Fair,	Post time table; procure school certificate.	Complied.
A. Goldberg,	Trousers,	2	–	–	–	Fair,	None,	–
S. Goldman,	Trousers,	9	5	–	–	Fair,	None,	–
Max Fleischman,	Dresses,	5	–	–	–	Fair,	Secure workshop,	–
Chelsea.								
S. Soloman,	Coats,	14	6	–	–	Fair,	Clean and designate closets,	Complied.
Mrs. H. Foyr,	Vests,	2	12	–	–	Good,	None,	–
Melrose.								
Mrs. Stantial,	Shirts,	–	9	–	–	Fair,	Separate workroom from living room.	Complied.
Cambridge.								
Esta Kadena,	Knee trousers,	2	2	–	–	Bad,	Secure proper workshop,	Complied.
J. Saltman,	Shirts,	1	2	–	–	Fair,	Secure workshop,	Complied.
Somerville.								
Goldman & Biller,	Trousers,	4	5	–	–	Good,	Post time table; designate water-closets.	Complied.

Digitized by Google

Recommendations.

That chapter 91, section 84, of the Public Statutes, relating to the catching of lobsters, be amended that the same shall be more effective.

That chapter 471, Acts of 1895, and chapter 546, Acts of 1896, relating to the examination of engineers and firemen, be more clearly defined.

Digitized by Google

BOILER INSPECTION DEPARTMENT.

REPORTS OF INSPECTORS.

Digitized by Google

Digitized by Google

BOILER INSPECTION DEPARTMENT.

REPORT OF INSPECTOR HAWLEY.

District No. 1.

SIR: — I submit herewith my sixth annual report, together with the summaries of examination of engineers and inspection of boilers.

In this district, through the appointment of additional inspectors, it has been possible to do much more work in the inspection of boilers than was possible before, since the examination of engineers and firemen prevented the important work of inspection from being properly attended to. What this work has accomplished can be seen by reference to the reports of inspectors McGrath and Dyer, who have been inspecting boilers in this district. There has been no opposition whatever so far as I can discover to the work of the inspection of boilers, and everywhere there has been a disposition to comply willingly with the recommendations of the inspector, even where considerable expense was entailed. Much time must necessarily be spent in the future in ascertaining the location of boilers that have never been reported or inspected, and there are a large number of such boilers still awaiting inspection that never have yet been inspected. The defects found upon boilers are much the same in character as have been reported in previous years, and to detail them would be merely a repetition of statements in previous reports. The inspection of boilers in heating establishments, such as schools, apartment houses and small hotels, has developed a most marked absence of the proper fittings upon a boiler. Safety valves were safety valves in name only, being wholly inadequate in size, large tubular boilers being fitted with three-quarter inch and one inch safety valves. Safety plugs upon many of these boilers are unknown, and the fittings connected with the showing of the proper level of water in the boilers were inadequate and improperly set up. All these matters were remedied, and a systematic inspection of all boilers of this character is likely to find many more in the same condition.

The law for the examination of engineers and firemen has absorbed the greater portion of time, 1,787 men having been ex-

Digitized by Google

amined for licenses. The greater portion of these were for firemen. The provision of apparatus for the practical examination of applicants has been of great assistance in determining the practical ability of those who apply. It has appeared that very many men who have been starting and stopping and oiling engines for years know nothing beyond that. The setting of engine valves is something they have not done and understand nothing about, and the apparatus provided to ascertain this fact has conclusively shown this to be the case. In some instances I have gone to the steam plants of these people, and upon examination have found the engines running, but with valves not properly set, and in such condition that the breaking of either the main or governor belt would cause a dangerous racing of the fly wheel.

This district appears to be the place receiving the largest number of applicants from outside the State. They come to Boston, reside a few days here, give a Boston address and are examined. The idea is that if by any means they can get a license it will be all that is needed to get a position as engineer or fireman, and that such positions are plentiful. These men are usually very incompetent men, and, failing to obtain a license, return to the place they came from. Many men also have an interest to know about how much they know as engineers, and take this method of finding their deficiencies, with but little expectation of obtaining a license. This swells the amount of applications and the amount of work necessary to be done, and really serves no useful purpose for which the law was enacted, because the majority of such applicants do not contemplate engaging either as engineer or fireman. The present method of grading engineers appears to be very imperfectly defined in the law, and there is an element of doubt as to just what the powers given by the different licenses are. There is also some doubt as to when a fireman's license is needed, and if these matters were more clearly defined, there would be more satisfaction and less uncertainty.

During the year a very large number of complaints have been investigated, many of them being anonymous communications which it was felt should be looked up. In the majority of cases there was found to be a violation of the law, but in most cases no intentional violation could be proved, which must be done in order to bring the matter into court. In many cases there was no violation of the law, the parties complaining being in doubt as to whether the persons operating at a certain place were licensed. The statute does not compel the engineer to hang up his license in the engine or boiler room. If this were so, it would lead to less loss of time in investigating groundless complaints, and would also assist

Digitized by Google

Digitized by Google

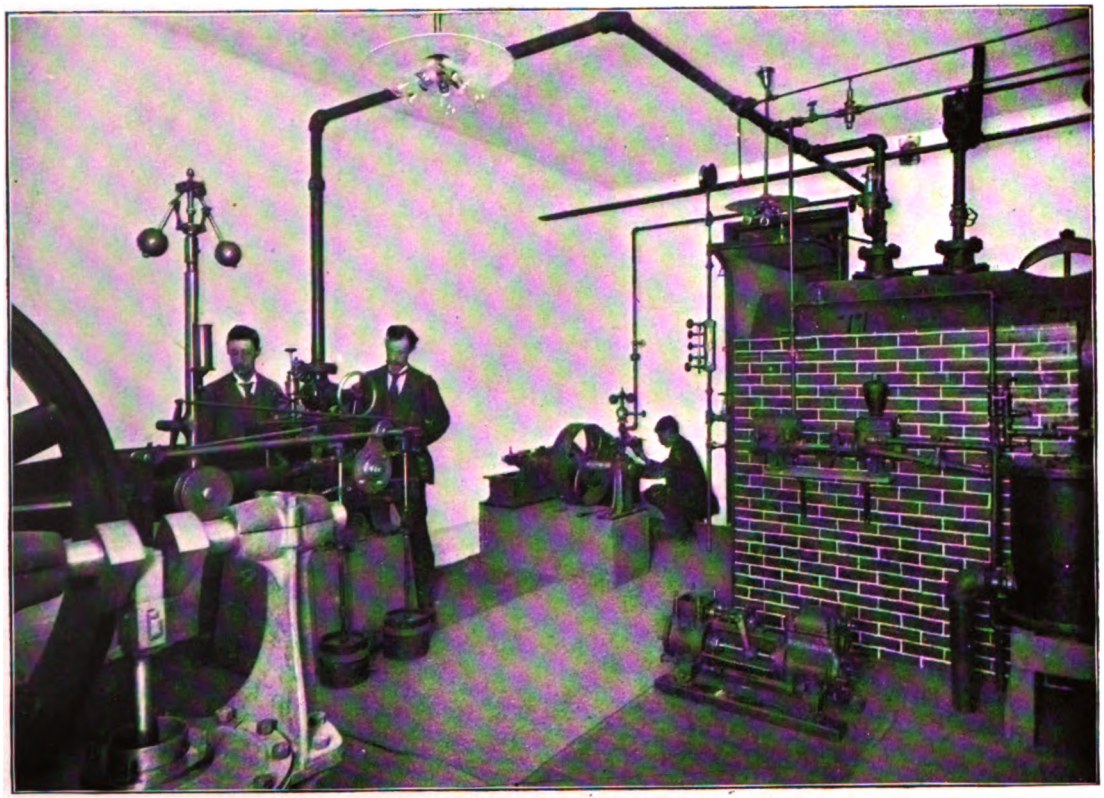

EXAMINATION ROOM FOR ENGINEERS AND FIREMEN.

Digitized by Google

in locating places where the persons in charge and operating were not licensed. During the year nine cases were brought into court and eight convictions obtained. The case that was lost was against the employer himself. As the law is worded, it will be very difficult to obtain a conviction against an employer, although it is generally believed that such is not the case, and that both employer and employee are equally liable. As above stated, there is a doubt as to what the different licenses mean, but I must report that the general disposition among employers is to accept the interpretation of the department, and comply as nearly as possible with such interpretation.

New applications for examination are being received at the rate of forty a week, and this number is likely to be increased by those whose licenses expire and will ask examination for a higher grade of license. The clerical work attending the reissue of licenses will also take a considerable amount of time during the coming year.

Description of Apparatus for Examination of Engineers and Firemen.

The Legislature at its last session appropriated $2,500 for the purpose of purchasing suitable apparatus for the practical examination of engineers and firemen. The inspectors had found great difficulty in ascertaining, from the purely oral examination, the practical ability as engineers of those who applied. There were very many men who were practical, capable men when put to work upon an engine, but could do little or nothing in telling about it. On the other hand, there were many men who could tell a great deal about an engine or boiler, in such a manner that the inspector could not say that he did not know, however much he might feel so, but yet the man had had little practical experience. To ascertain the practical ability of the men, in both these cases, was the object of providing the apparatus authorized by the appropriation referred to.

There has been put up at this office, in the basement of the State House, an examination room, in which such apparatus as has been obtained is set up. A view of this room is shown in the engraving. The apparatus consists of a Corliss four-valve steam engine, built by the Corliss Steam Engine Works, with the common crab-claw motion. This was selected because representing the most common type of Corliss engine, and differing only in detail from all the various types of engines built upon the Corliss patent. The principle is also applicable to all engines of the four-

Digitized by Google

valve type, and if a man can set the valves upon this engine, and understands why he does it, he can set the valves upon any four-valve engine. The engine set up has eight-inch cylinder with twenty-inch stroke of piston, is a working engine, and had been in daily operation for several years before its purchase for examination purposes by this department. There is also a slide-valve engine with riding cut-off valve, a type common in this vicinity in many steam plants. In addition, there is a common upright slide-valve engine and a horizontal slide-valve engine, with reverse rocker arm between the eccentric and the valve. An air pump similar to that found upon the usual mill condensing engine, with jet condenser, is also set up. This is independent of the engine, and belt-driven.

A steel return tubular boiler was built, thirty-six inches in diameter, but shortened necessarily because of limited room. This boiler is complete in every way. It is double riveted and properly braced to withstand a working pressure of 100 pounds. It is provided with proper man-hole and hand-hole openings for cleaning out and inspection, and is provided with cast-iron flush front with all furnace fittings. This boiler is set up in the examining room with all the fittings found upon a boiler. The water column or combination box with glass and gauge cocks is set so it can be raised or lowered as desired. One side of the boiler is set up as a low-pressure system, and includes damper regulator, the return pipes, check valves and other fittings found in a low-pressure heating system. The other side of the boiler is set up as a high-pressure system. The boiler is provided with a lever and pop safety valve. The main steam pipe is directly connected with both the Corliss and riding cut-off engine. From the main steam pipe, connections are made through a reducing valve for heating the building as auxiliary to the exhaust steam. Connections are made with pumps for feeding the boiler and with inspirator. The pump is set up so as to feed through the exhaust-steam feed water heater, which receives the steam from the Corliss engine, and is piped so it can be used either to heat the building through the medium of a back-pressure valve, or exhaust direct to the atmosphere. A high-pressure damper regulator is also attached to the boiler, and a steam trap takes the returns from the heating.

The whole plant is set up exactly as it would be in actual operation, and the method of examination is to examine the applicant upon his actual familiarity and knowledge of the boiler and its fittings and connections as he sees it before him. Instead of being asked how to pack a pump piston, set the valves in a pump

Digitized by Google

or to start the inspirator, he is asked to actually do the work, and left a sufficient length of time by himself to do it in. Instead of being asked to describe a boiler and its fittings, he is asked to point them out, and asked what the different fittings in the examination room are, and their purpose and care. The applicant for engineer's license is set to work setting the valves on the various engines according to the grade he applies for, to key up, line up and level, and do such other work as the engineer ought to know how to do. The engine is usually left exactly as the last applicant left it, and no attempt is made to puzzle in any way. It may be that the valves are properly set, everything properly in line and the engine ready to be run, and if so the applicant should know that such is the case, or it may be that the valves are misadjusted and the engine not in proper condition to run, in which case this must be ascertained and the engine put in proper condition. This method has proved without doubt the practical ability of the various applicants. The time involved is a serious objection. During the examination, while the applicant is working on the engines, he is left alone without the presence of the examiner, until he states he is ready and has completed his work, or until a sufficient time has elapsed. This method seems to be the best and fairest method of ascertaining the practical knowledge of those who apply. It may be of interest to note that the engines have been broken a number of times by applicants for examination who did not know what they were doing.

The list of apparatus and fittings in the examination room follows, and additions are being made to this list: —

One 8 by 20 inch Corliss engine, 8 foot fly-wheel; 1 belt-driven bucket air pump for jet condenser; 1 riding cut-off engine, Judson governor, Putnam cross-head, piston and guides; 1 upright slide-valve engine, Waters governor; 1 horizontal slide-valve engine; 2 throttle governors, automatic closure if belt breaks; 1 section of slide-valve engine and steam chest; 1 36-inch horizontal tubular boiler; 2 air-pump bucket valves and guard; 1 duplex steam pump for 150 horse-power boiler; 1 simple double-acting pump; 1 inspirator; 1 injector; 1 lever safety valve; 3 pop safety valves; 2 reducing valves; 1 low-pressure damper regulator; 1 Mason high-pressure damper regulator; 1 steam trap; 1 exhaust-steam feed water heater; 1 condenser relief valve; 1 water column with three gauge cocks and glass; 3 oil cups; 2 sight-feed double-connection lubricators; brass and rubber pump valves, worn out and new; various types of fusible plugs; engine pistons outside engines; swing and lift check valves; straightway, globe and angle valves; nipples; unions; couplings; reducing couplings;

Digitized by Google

bushings; elbows; tees; right and left couplings; nipples, elbows, etc.; lock nuts; caps; plug cocks; air valves; pet cocks; water glasses, with their washers, etc.

In addition, there are boiler plates and tubes taken from defective boilers, showing boiler plates in different states of corrosion, pitting and deterioration.

Following is a summary of inspections and examinations: —

Summary of Examinations.

New applications received,		1,641
Applicants for license examined,		1,787
Licenses granted: —		
First class,	19	
Second class,	23	
Third class,	53	
Special,	354	
Hoisting,	25	
Firemen,	280	
Steam fire engine,	8	
Total licenses,	762	
Licenses refused,		833
Examined once, given another trial,		192
Applications on file, notified but did not appear for examination,		894
Renewals,		98

Summary of Inspections.

Boilers inspected,	77
Defects found,	159
Defects found dangerous,	108
Boilers ordered repaired,	48
Boilers condemned,	3
Prosecutions for violation of license law,	9
Prosecution for violation of boiler law,	1
Complaints investigated,	163

Digitized by Google

Boiler Inspection Report

DISTRICT No. 1.

NAME.	Building Used for —	Defects Found. Total.	Defects Found. Dangerous.	Orders Given.	Compliances.
Boston.					
McKie, John A.,	Ship building,	2	1	Cut hand-hole; repair safety valve,	Complied.
Savage, J. W.,	Lobster boiling,	1	1	Fusible plug,	Complied.
Nickerson, A. T., & Co.,	Lobster boiling,	2	2	New fusible plug; repair safety valve,	Complied.
Cox, David S.,	Lobster boiling,	2	2	New fusible plug; new safety valve; reduce pressure,	Complied.
City of Boston,	Brighton library,	1	1	Fusible plug,	Complied.
City of Boston,	West End library,	-	-	None,	-
Hamlen, I. B., & Sons,	Sawing wood,	4	4	Fusible plug; replace try cocks; clear out glass connection,	Complied.
Whittemore, W. P.,	Grain mill,	2	2	Fusible plug; new gauge cock,	Complied.
City of Boston,	Brighton high school,	2	2	Fusible plug (two inspections),	Complied.
City of Boston,	Brighton high school,	2	2	Repair setting,	Complied.
Simons, N.,	General purposes,	-	-	None,	-
N. E. Kitchen,	Cooking,	-	-	None,	-
Brackett, H. B.,	Apartments,	4	3	Check valve; gauge cocks,	Complied.
Pratt, R. & J.,	Yard,	2	1	Fusible plug,	Complied.
Pratt, R. & J.,	Yard,	-	-	None,	-

Digitized by Google

Boiler Inspection Report — Continued.

NAME.	Building Used for —	Defects Found. Total.	Defects Found. Dangerous.	Orders Given.	Compliances.
Boston — Con.					
Isele, A. W., & Son,	Blacksmith,	1	1	Reduce pressure,	Complied.
Connor, S. W.,	Laundry,	2	2	Larger safety valve; new fusible plug,	-
John Sheeden,	Dyeing,	3	2	Fusible plug; clear out gauge cocks; new safety valve,	-
Paul Boynton Co.,	The Chutes,	1	1	New fusible plug; reduce pressure,	Complied.
City of Boston,	Lawrence school,	5	3	Boiler condemned,	New boiler.
City of Boston,	Lawrence school,	4	2	Boiler condemned,	New boiler.
City of Boston,	Shurtleff school,	3	2	New safety valve; check valve on returns,	-
City of Boston,	Shurtleff school,	5	3	New safety valve; check valve on returns,	-
City of Boston,	Shurtleff school,	4	3	New safety valve; check valve on returns,	-
City of Boston,	Clinch school,	2	2	Boiler condemned,	New boiler.
City of Boston,	Wyman school,	-	-	None,	-
City of Boston,	Crocker school,	2	2	New tubes; reduce pressure,	Complied.
City of Boston,	Crocker school,	-	-	None,	-
City of Boston,	Sumner school,	5	2	New safety valve; fusible plug,	Complied.
City of Boston,	Mather school,	1	-	None (two boilers),	-
City of Boston,	Lyceum hall,	2	1	Lower boiler,	-
City of Boston,	Old Mather school,	5	3	New returns; check valve; new safety valve,	Complied.

Digitized by Google

City of Boston,	Dorchester high school,	2	2	Check valve; new safety valve,	Complied.
City of Boston,	Dorchester high school,	2	2	Check valve; new safety valve,	Complied.
City of Boston,	Charlestown library,	1	1	New tubes,	Complied.
City of Boston,	Charlestown library,	1	1	New tubes,	Complied.
City of Boston,	East Boston high school,	3	2	New tubes,	Complied.
City of Boston,	Lyman school,	4	-	No orders (two boilers),	-
City of Boston,	Cudworth school,	2	-	No orders (two boilers),	-
City of Boston,	Martin school,	2	-	No orders (two boilers),	-
City of Boston,	Martin school,	4	2	Renew certain piping; new fusible plug; pipe blow-off beyond boiler.	Complied.
City of Boston,	Girls' high school,	5	-	No orders (two boilers),	-
Miss M. F. Fisk,	Stores,	6	2	New tubes; fusible plug; check valve,	Complied.
City of Boston,	Charlestown almshouse,	2	1	Drip to column; new safety valve (two boilers),	-
Metropolitan Sewerage Commission,	Pumping station, Charlestown.	3	-	No orders (two boilers),	-
Metropolitan Sewerage Commission,	Pumping station, East Boston.	4	-	No orders (four boilers),	-
Metropolitan Sewerage Commission,	Pumping station, Deer Island.	-	-	No orders (two boilers),	-
Arlington.					
Fowle, Sam'l A.,	Drug mill,	1	1	Reduce pressure or provide additional stay bolts,	Complied.
Chelsea.					
Creamer, L. C.,	Lobster boiling,	2	2	Cut hand-holes; fusible plug,	Complied.
Stickney, Tirrell & Co.,	Chalk manufacturers,	6	5	Patch boiler over fire; remove scale; new fusible plug; use better water.	Complied.
Stickney, Tirrell & Co.,	Chalk manufacturers,	6	4	Repair gauge; new fusible plug; reduce pressure; new safety valve.	Complied.

Digitized by Google

Boiler Inspection Report — Concluded.

NAME.	Building Used for—	Defects Found.		Orders Given.	Compliances.
		Total.	Dangerous.		
Chelsea—Con.					
City of Chelsea,	Road roller,	2	-	None,	-
Foster, O. S.,	Brick yard,	6	4	New fusible plug; new safety valve; repair furnace,	Complied.
Foster, O. S.,	Brick yard,	3	3	Fusible plug; new safety valve; reduce pressure,	Complied.
Cambridge.					
Henderson, C. M.,	Dealer,	3	1	Fusible plug; remove scale,	Complied.
Keeler & Co.,	Furniture factory,	1	1	Fusible plug,	Complied.
Ararat Kindling Wood Co.,	Sawing wood,	1	1	Repair gauge,	Complied.
Holy Ghost Hospital,	Hospital,	-	-	No orders,	-
Holy Ghost Hospital,	Hospital,	1	-	Reduce pressure or provide additional braces; larger safety valve,	Complied.
Everett.					
Taylor, Fred G.,	Woodworking,	-	-	None,	-
Malden.					
Middlesex Last Co.,	Lasts,	-	-	None,	-
Williams-Clifton,	Laundry,	7	5	Two patches; new fusible plug; repair gauge; reduce pressure,	Complied.
Bowser, W. W.,	Woodworking,	8	7	New rivets in places; remove scale; new fusible plug; new blow-off pipe and valve; repair setting.	Complied.
Hall, W. W.,	Wood yard,	2	1	None,	-

Digitized by Google

Report of Inspector McGrath.

District No. 1.

Sir: — In compliance with your request, I most respectfully submit the following report: —

In my line of duty while connected with this department during the year it has been my privilege to inspect 287 boilers and examine applicants for licenses in the various grades. My experience in the inspection of boilers has been most gratifying. Everywhere I have been to inspect a boiler, with possibly one or two exceptions, I have found the owner or agent perfectly willing and pleased to have the boiler inspected. I have been treated with courtesy, and found on the part of the owner a respect for the law and a perfect willingness to comply with the same when explained and understood. I have found no trouble in having my orders for repairs and changes complied with, with one or two exceptions before noted. In those exceptional cases it seemed to be a case of the dollar being of more value than human life.

Everywhere there seems to be a satisfaction expressed in regard to the law on the part of owners and users of boilers, and more particularly on the part of those persons who are working and living in buildings where steam boilers are located.

It is remarkable what an amount of ignorance or criminal carelessness is displayed on the part of some steam fitters in setting and connecting boilers, particularly low-pressure boilers for heating purposes. A few days ago I called at a place where I had previously ordered repairs and changes on a boiler. One of the orders was to put on a larger safety valve, that most important of boiler fittings. I found the new safety valve just the size I ordered, but the pipe connecting valve to boiler was the same used to connect the old or smaller safety valve. I ordered it changed immediately, and a pipe connection put on of the same area as the new valve. In conversation with the steam fitter who made the repairs, I asked him why he had connected a one and a quarter inch safety valve with a three-quarter inch pipe. His reply was that I didn't order the pipe changed, only the safety valve. This man informed me that he had been steam fitting the past forty years. I mention this as only one case of the many that have come under my observation, and I presume the other inspectors have had the same experience. When taking into consideration the amount of ignorance as to the proper fittings and settings for a boiler displayed by some steam fitters, it is not at all surprising that we find so many boilers so poorly and dangerously set and

Digitized by Google

connected. Previous to the passage of the boiler inspection law the setting and connecting of boilers were entirely in their hands.

When inspecting boilers I find a disposition manifested on the part of the engineers and firemen to point out all defects that come under their notice, and a perfect willingness on their part to aid the inspector in every way they can. They seem also to take great pride in having the engine and boiler room neat and tidy when being visited by the inspector. This is a very gratifying state of affairs; it not only helps and makes it agreeable for the inspector, but shows a disposition on the part of the engineer and fireman to have everything about the boiler in a safe condition, and it also proves beyond doubt that there is a feeling of harmony between them and this department.

My experience in the examination of engineers and firemen has been limited, but in the few I have examined I find in nearly fifty per cent. of the cases a great lack of the necessary knowledge to justify giving them the license they are seeking. Some of them show such a lamentable amount of ignorance in regard to the duties for which they are seeking a license, that I wonder what their conception of the duties of an engineer or fireman are. I am well satisfied it is a case of willingness on their part to pay a dollar to find out how little they know about the business.

Following is a summary of inspections and examinations:—

Examinations.

Applicants for a license examined,	104
Licenses granted,	59
First class,	1
Second class,	2
Third class,	3
Special,	24
Hoisting,	2
Fireman,	23
Renewals,	4
Total licenses granted,	59
Licenses refused,	49

Summary of Inspections.

Boilers inspected,	286
Boilers ordered repaired,	255
Defects found,	1,656
Dangerons defects,	715
Boilers condemned,	2

Digitized by Google

Boiler Inspection Report.

DISTRICT No. 1.

NAME.	Building Used for—	Defects Found.		Orders Given.	Compliances.
		Total.	Dangerous.		
Boston.					
Margaret M. Hickey,	In yard,	14	3	Three boilers; fusible plug in each,	-
A. F. Hyde,	Coal and wood,	2	-	None,	-
E. F. Lowedy,	Canning,	1	-	None,	-
E. H. Gifford,	Blacksmith,	-	-	None,	-
Owen Brock,	Boiler manufacturer,	5	1	Raise pressure gauge,	Complied.
Holt & Bugbee,	Lumber drying,	1	-	None,	-
Samuel Gurrin,	Kindling wood,	5	2	Boiler condemned,	-
U. S. Lyons,	Carpet cleaning,	7	2	Patch on head; fusible plug,	Complied.
G. M. Bowditch,	Carriage manufacturer,	1	1	Fusible plug,	-
F. B. Day & Son,	Stores and offices,	1	-	None,	-
Raffaele Vesce,	Manufacturer,	-	-	None,	-
Levin & Navisky,	Kindling wood,	6	1	Fusible plug,	Complied.
E. B. Masonic Building Association,	Halls, stores and offices,	2	1	Repair safety valve,	Complied.
Herbert L. Frizell,	Ladder manufacturer,	3	-	None,	-
E. Ather,	Sausage making,	1	1	Fusible plug,	Complied.

Digitized by Google

Boiler Inspection Report — Continued.

NAME.	Building Used for —	Defects Found.		Orders Given.	Compliances.
		Total.	Dangerous.		
Boston — Con.					
Gans & Martin,	Sweet cake,	3	-	None,	-
Leonard Ware & Sons,	Oil,	5	1	Setting repaired,	Complied.
Boston Tow Boat Co.,	Head house on wharf,	2	2	Two boilers; repair setting,	Complied.
Boston Tow Boat Co.,	Blacksmith,	4	2	Repair leaky tubes; put in fusible plug,	Complied.
Boston Tow Boat Co.,	Lighter,	4	2	Fusible plug; repair leaky tubes,	Complied.
Boston Tow Boat Co.,	Hoister,	2	1	Fusible plug,	-
Berlo Bros.,	Sausage,	3	2	Fusible plug; repair leaky tubes,	Complied.
E. B. Dahlquest,	Laundry,	1	1	Repair siphon,	Complied.
W. E. Elliott,	Carpet cleaning,	3	1	Fusible plug,	Complied.
Bowker, Torrey & Co.,	Marble,	4	2	Repair steam gauge connections; shorten one brace,	Complied.
Geo. H. Cavanagh,	Hoister,	3	1	New water glass,	Complied.
Houghton & Dutton,	Offices and stores,	1	-	None,	-
Equitable Life Insurance Co.,	Offices,	1	1	Repair setting,	Complied.
Boston Museum,	Theatre, stores and offices,	2	1	Repair steam gauge connections,	Complied.
Solomon Gurrin,	Yard, not in use,	2	1	Four extra braces,	Complied.
E. H. Eldridge & Co.,	Offices and stores,	4	2	Larger safety valve; raise water column,	Complied.

Digitized by Google

E. H. Eldridge & Co.,	Apartment,	-	-	None,	-
Boston Leasehold Co.,	Apartment,	-	-	None,	-
Boston Leasehold Co.,	Apartment,	-	-	None,	-
E. H. Eldridge & Co.,	Apartment,	5	1	Fusible plug,	Complied.
A. Geiger, Jr , agent,	Apartment,	5	1	Fusible plug,	Complied.
E. H. Eldridge & Co.,	Hotel,	-	-	None,	-
Boston, Revere Beach & Lynn R.R.,	Depot,	-	-	None,	-
H. & R. Atwood,	Fish store,	5	2	Larger safety valve; repair steam gauge connections,	Complied.
Equitable Life Insurance Co.,	Offices,	2	1	Tighten one brace,	Complied.
Henry G. Hyde,	Stores and offices,	2	1	Repair setting,	Complied.
R. W. Husted, treasurer,	School of law,	-	-	None,	-
Dr. John H. Paine, treasurer,	Medical college,	5	2	Repair setting; check in returns,	Complied.
Dole & Sherburne,	Offices, stores,	2	-	None,	-
E. H. Eldridge & Co.,	Apartment,	-	-	None,	-
Mrs. W. B. Crocker,	Stores,	-	-	None,	-
J. Rothschild,	Stores, offices,	7	5	Two hand-holes; check in returns; repair setting; put three binders outside brick work; new tubes.	Complied.
G. D. Gilman,	Stores, offices,	2	1	Check in feed pipe,	Complied.
Acme Silver Plate Co.,	Manufacturing,	2	1	Repair setting entire length boiler,	Complied.
Equitable Life Insurance Co.,	Offices,	-	-	Two boilers, none,	-
A. J. Lovett, agent,	Apartment,	2	1	Fusible plug,	Complied.
Wm. Holden, agent,	Apartment,	3	3	Fusible plug; check in returns; drain cock in siphon,	Complied.
W. R. White & Co.,	Hotel,	2	2	Clean out blow pipe; repair setting,	Complied.

Digitized by Google

Boiler Inspection Report — Continued.

NAME.	Building Used for —	Defects Found.		Orders Given.	Compliances.
		Total.	Dangerous.		
Boston — Con.					
Wm. H. Agry,	Apartment,	2	2	Larger safety valve; three try cocks,	Complied.
C. C. Simmons,	- -	3	1	Man-hole,	Complied.
J. W. Smith,	Hotel,	2	2	Fusible plug; larger safety valve,	Complied.
Houghton & Dutton,	Offices,	6	-	None, two boilers,	-
G. A. Hall, agent,	Apartment,	5	5	Check in returns; try cocks; siphon; repair steam gauge; fusible plug.	Complied.
Geo. A. Hall, agent,	Apartment,	5	4	Check in returns; try cocks; siphon; fusible plug,	Complied.
Geo. A. Hall, agent,	Apartment,	5	4	Check in returns; try cocks; fusible plug; siphon,	Complied.
Geo. A. Hall, agent,	Apartment,	5	4	Check in returns; try cocks; siphon; fusible plug,	Complied.
Geo. A. Hall, agent,	Apartment,	2	2	Fusible plug; siphon,	-
Geo. A. Hall, agent,	Apartment,	3	2	Fusible plug; siphon,	Complied.
Geo. A. Hall, agent,	Apartment,	2	2	Check in returns; fusible plug,	Complied.
Burbank & Ryder,	Manufacturing varnishes,	1	1	Fusible plug	Complied.
J. Goldsmith,	Apartment,	3	3	Check in returns; fusible plug; drain cock in siphon,	Complied.
J. Goldsmith,	Apartment,	3	3	Check in returns; fusible plug; drain cock in siphon,	Complied.
J. Goldsmith,	Apartment,	6	6	Two boilers; check in returns; fusible plug; drain cock in siphon; all both boilers.	Complied.
Harvard Street Baptist Society,	Church,	1	1	Fusible plug,	Complied.
Houghton & Dutton,	Stores,	1	1	New blow pipe,	Complied.

Digitized by Google

Denis, Thompson & Co.,	Wood and coal,	1	1	Drain cock in siphon,	Complied.
Hall Carriage Co.,	Stable,	2	2	Fusible plug; repair steam gauge,	Complied.
Boston Can Co.,	Manufacturing,	1	1	Fusible plug,	Complied.
Boston Can Co.,	Manufacturing,	-	-	None,	-
Boston & Philadelphia Steamship Co.	Freight house,	2	2	Larger safety valve; fusible plug,	Complied.
Boston & Philadelphia Steamship Co.	Freight house,	5	4	New tubes; two new heads; fusible plug,	Complied.
American Express Co.,	Stores and offices,	-	-	Two boilers; none,	-
American Express Co.,	Stables,	2	2	Larger safety valve; siphon,	-
Bowker, Torrey & Co.,	Marble works,	8	2	Repair setting in two boilers,	Complied.
Robert Codman,	Offices,	1	1	Repair setting,	Complied.
Howe & French,	Paints and oils,	4	1	Fusible plug,	Complied.
Durgin, Park & Co.,	Eating house,	2	1	Repair steam gauge,	Complied.
S. Goldsmith,	Apartment,	1	1	Fusible plug,	Complied.
S. Goldsmith,	Shed,	2	1	Fusible plug,	-
J. Wilkinson Clapp,	Medical dispensary,	6	3	Check in returns; larger safety valve; drain cock in siphon,	Complied.
Henry Kelly,	Manufacturing,	8	5	Mud drum taken off; change blow pipe, new water glass, and connections; repair setting entire length; fusible plug.	Complied.
Ginn & Co.,	Stores, offices,	1	1	Fusible plug,	Complied.
Edward Leonard,	Hotel,	2	2	Try cocks; fusible plug,	Complied.
Hallet & Davis Co.,	Piano manufacturing,	4	3	New rivets in shell; repair setting fusible plug,	Complied.
Hallet & Davis Co.,	Piano manufacturing,	3	2	Fusible plug; reduced pressure,	Complied.
Houghton & Dutton,	Stores and offices,	-	-	None,	-
Harvey N. Sheppard, agent,	Stores and manufacturing,	2	-	None,	-

Digitized by Google

Boiler Inspection Report — Continued.

NAME.	Building Used for —	Defects Found.		Orders Given.	Compliances.
		Total.	Dangerous.		
Boston — Con.					
Boston Leasehold Co.,	Apartment,	1	1	Repair pressure gauge,	Complied.
Boston Leasehold Co ,	Apartment,	5	5	Check in returns and feed; repair pressure gauge; fusible plug,	Complied.
Boston Leasehold Co.,	Apartment,	–	–	Larger safety valve,	–
Boston Leasehold Co.,	– –	5	5	Fusible plug; check in feed and returns; larger safety valve; repair pressure gauge.	Complied.
Boston Leasehold Co.,	Apartment,	6	5	Larger safety valve; check in returns and feed; repair steam gauge; fusible plug.	Complied.
Beacon Hill Real Estate Co.,	Apartment,	2	–	None; two boilers,	–
E. A. Fitch & Co.,	Stables,	2	2	Fusible plug; siphon,	Complied.
D. M. Crosby,	Apartment,	4	3	Fusible plug; repair setting, siphon, steam gauge,	Complied.
Chas. Vossler,	Hotel,	–	–	None,	–
Flinn & Mahoney,	Candle manufacturers,	1	1	Check in feed,	Complied.
James I. McKenzie,	Halls,	–	–	None,	–
M. B. & E. P. Cummings,	Lumber,	3	2	Fusible plug; repair setting,	Complied.
E. D. Mallory,	Church,	–	–	None,	–
J. W. Dammerall,	Stores, shops,	3	2	Hand-hole reinforced; fusible plug,	Complied.
J. P. Hatch,	Hotel,	1	1	Repair steam gauge,	Complied.
J. B. Dupee,	Apartment,	4	4	Check in returns and feed; try cocks; fusible plug,	Complied.
B. P. Barker,	Apartment,	5	4	Check in returns and feed; try cocks; fusible plug,	Complied.

Digitized by Google

E. F. Damon, agent,	Apartment,	4	3	Larger safety valve; fusible plug; check in returns and feed,	Complied.
Hyde Estate,	Apartment,	3	3	Try cocks; fusible plug; check in feed,	Complied.
Hyde Estate,	Apartment,	4	3	Try cocks; fusible plug; check in feed,	Complied.
Hyde Estate,	Apartment,	3	3	Try cocks; fusible plug; check in feed,	Complied.
H. L. Marcy, agent,	Apartment,	4	4	Try cocks; fusible plug; check in feed and returns,	Complied.
Chas. Abrahams,	Apartment,	1	1	Check in feed,	Complied.
Morris Lewis,	Apartment,	1	1	Check in feed,	Complied.
O'Brien Bros.,	Apartment,	4	4	Check in returns and feed; fusible plug; cock in water glass,	Complied.
A. L. Wilbour,	Apartment,	5	4	Cock in water glass; fusible plug; check in feed and returns,	Complied.
A. Geiger, agent,	Apartment,	1	1	Repair setting,	Complied.
A. Felener,	Apartment,	–	–	None,	–
C. I. Jackson, agent,	Apartment,	2	2	Fusible plug; check in returns,	Complied.
C. I. Jackson, agent,	Apartment,	2	2	Fusible plug; check in returns,	Complied.
H. W. Jordan,	Apartment,	3	3	Check in feed and returns; fusible plug,	Complied.
O. M. Wentworth,	Apartment,	5	4	Check in returns and feed; fusible plug; cock in siphon,	Complied.
O. M. Wentworth,	Apartment,	4	4	Check in returns and feed pipe; drain cock on pressure gauge; fusible plug.	Complied.
C. E. Ellis,	Hotel,	2	1	Repair setting,	Complied.
Geo. Hobbs,	Box manufacturer,	–	–	Condemned,	–
Frank Vesce,	Hotel,	3	3	Check in feed and returns; fusible plug,	–
Peter C. Brooks,	Offices,	2	–	None,	–
S. E. Jennison,	Hotel,	3	3	Larger safety valve; fusible plug; siphon,	Complied.
S. E. Jennison,	Hotel,	6	4	Two boilers; two safety valves larger; two fusible plugs,	Complied.

Digitized by Google

Boiler Inspection Report — Continued.

NAME.	Building Used for —	Defects Found.		Orders Given.	Compliances.
		Total.	Dangerous.		
Boston — Con.					
F. L. Robbins,	Hotel,	3	2	One rivet; repair setting,	Complied.
E. W. Messengar,	Hotel,	2	1	Check in feed,	Complied.
W. D. Dorris & Co.,	Hotel,	4	4	Repair safety valve; repair setting; fusible plug; check in feed,	Complied.
Rodberg & Co.,	Stores,	3	2	Repair fire box; check in feed,	Complied.
P. J. Riorden,	Apartment,	1	1	Check in returns,	Complied.
Wm. Heckle,	Apartment,	5	5	Check in returns and feed; repair setting; fusible plug; brick wall braced.	Complied.
H. L. Marcy, agent,	Apartment,	4	3	Check in returns and feed; siphon,	Complied.
C. A. Jackson,	Apartment,	3	3	Check in returns and feed; siphon,	Complied.
H. L. Marcy, agent,	Apartment,	3	3	Check in returns and feed; fusible plug,	Complied.
H. L. Marcy, agent,	Apartment,	5	3	Check in returns and feed; fusible plug,	Complied.
H. L. Marcy, agent,	Apartment,	4	3	Check in returns and feed; fusible plug,	Complied.
H. L. Marcy, agent,	Apartment,	4	3	Check in returns and feed; fusible plug,	Complied.
H. L. Marcy, agent,	Apartment,	2	2	Try cocks; fusible plug,	Complied.
H. L. Marcy, agent,	Apartment,	2	2	Try cocks; fusible plug,	Complied.
H. L. Marcy, agent,	Apartment,	4	3	Try cocks; fusible plug; check in feed,	Complied.
H. L. Marcy, agent,	Apartment,	3	2	Fusible plug; check in returns,	Complied.
H. L. Marcy, agent,	Apartment,	5	4	Check in returns and feed; try cocks; fusible plug,	Complied.

Digitized by Google

H. L. Marcy, agent,	Apartment,	1	1	Fusible plug,	Complied.
G. B. Haskill, agent,	Apartment,	4	3	Repair setting; check in feed; reinforce hand-hole,	Complied.
G. B. Haskill, agent,	Apartment,	5	4	Fusible plug; check in returns and feed; stop valve in returns,	Complied.
G. B. Haskill, agent,	Apartment,	5	4	Fusible plug; check in returns and feed,	Complied.
Walter M. Briggs,	Apartment,	6	3	Fusible plug; check in returns and feed,	Complied.
Walter M. Briggs,	Apartment,	5	3	Check in feed and returns; fusible plug,	Complied.
J. Feldman,	Apartment,	2	1	Siphon,	Complied.
N. G. Burleigh,	Apartment,	4	4	Fusible plug; check in feed and returns; raise column,	Complied.
Mr. Sweat,	Apartment,	2	2	Check in returns and feed,	Complied.
C. E. Jackson,	Apartment,	5	3	Fusible plug; check in returns; handle on try cock,	Complied.
C. E. Jackson,	Apartment,	2	1	Fusible plug,	Complied.
H. I. Jackson, agent,	Apartment,	6	6	Fusible plug; two checks in returns; two stop valves in returns; check in feed.	Complied.
H. I. Jackson, agent,	Apartment,	8	6	Fusible plug; two stop and two check valves in returns; check in feed.	Complied.
W. H. Quincy, agent,	Apartment,	7	6	Blow pipe; try cocks; fusible plug; check in returns and feed; boiler reset.	Complied.
H. I. Jackson, agent,	Apartment,	6	4	Check in returns and feed; fusible plug; one try cock,	Complied.
H. I. Jackson, agent,	Apartment,	5	5	Check in returns and feed; fusible plug; change blow pipe; larger safety valve.	Complied.
H. I. Jackson, agent,	Apartment,	6	5	Larger safety valve; change blow pipe; check in returns and feed; fusible plug.	Complied.
M. Louis, agent,	Stores and apartment,	7	5	Larger safety valve; change blow pipe; check in returns and feed; fusible plug.	Complied.
Boston Leasehold Co.,	Apartment,	6	5	Larger safety valve; check in returns and feed; fusible plug; repair one try cock.	Complied.
Henry Perkins,	Apartment,	8	7	Check and stop valve in returns; change blow pipe; try cocks; change steam gauge; fusible plug; stop valve in main steam pipe,	Complied.
Boston Leasehold Co.,	Apartment,	5	3	Larger safety valve; fusible plug; check in returns,	Complied.
Boston Leasehold Co.,	Apartment,	4	3	Larger safety valve; check in returns; fusible plug,	Complied.

Digitized by Google

Boiler Inspection Report — Continued.

NAME.	Building Used for —	Defects Found. Total.	Defects Found. Dangerous.	Orders Given.	Compliances.
Boston — Con.					
Boston Leasehold Co.,	Apartment,	3	2	Try cocks; fusible plug,	Complied.
Boston Leasehold Co.,	Apartment,	5	3	Check in returns; fusible plug; try cocks,	Complied.
Boston Leasehold Co.,	Apartment,	3	2	Fusible plug; try cocks,	Complied.
Boston Leasehold Co.,	Apartment,	3	2	Fusible plug; try cocks,	Complied.
B. C. Clark, agent,	Apartment,	3	2	Fusible plug; try cocks,	Complied.
Boston Leasehold Co.,	Apartment,	2	2	Stop valve; main steam pipe; fusible plug,	Complied.
Boston Leasehold Co.,	Apartment,	4	2	Larger safety valve; check in feed,	Complied.
Boston Leasehold Co.,	Apartment,	6	5	Larger safety valve; stop valve in main steam pipe and main returns; check in feed; fusible plug.	Complied.
Boston Leasehold Co.,	Apartment,	5	4	Stop valve in main steam pipe and main returns; fusible plug,	Complied.
Boston Leasehold Co.,	Apartment,	4	3	Stop valve in main steam pipe and main returns; fusible plug,	Complied.
Boston Leasehold Co ,	Apartment,	6	4	Larger safety valve; stop valve in main steam pipe and main returns; fusible plug.	Complied.
Boston Leasehold Co.,	Apartment,	4	3	Repair one try cock; fusible plug; check in feed,	Complied.
Boston Leasehold Co.,	Apartment,	4	2	Fusible plug; check in feed,	Complied.
J. D. Valiquet,	Eating house,	9	9	Repair setting; fusible plug; change returns; three braces outside brickwork; repair pressure gauge connections; repair try cock connections; new water glass; check in returns; put man-hole in brick setting to give opportunity to get at safety valve.	Complied.
Boston Leasehold Co ,	Apartment,	4	3	Fusible plug; check in returns and feed,	Complied.
Boston Leasehold Co.,	Apartment,	5	5	Fusible plug; check in feed and returns; stop valve in main steam pipe and main returns.	Complied.

Digitized by Google

Boston Leasehold Co.,	Apartment,	7	6	Larger safety valve; stop valve in main steam pipe and main returns; fusible plug; change feed pipe; check in feed pipe.	Complied.
Boston Leasehold Co.,	Apartment,	6	4	Larger safety; try cocks; stop valve in main steam pipe and main returns; repair steam gauge.	Complied.
Boston Leasehold Co.,	Apartment,	7	5	Larger safety valve; try cocks; repair steam gauge; stop valve in main steam pipe and main returns.	Complied.
Boston Leasehold Co.,	Apartment,	6	5	Larger safety valve; try cock; repair steam gauge; stop valve in main steam pipe and returns.	Complied.
Boston Leasehold Co.,	Apartment,	6	5	Larger safety valve; try cocks; fusible plug; stop valve in main steam pipe and main returns.	Complied.
Boston Leasehold Co.,	Apartment,	5	4	Larger safety valve; fusible plug; stop valve in main steam pipe and main returns.	Complied.
Boston Leasehold Co.,	Apartment,	7	5	Larger safety valve; fusible plug; check and stop valve main returns; stop valve main steam pipe.	Complied.
Boston Leasehold Co.,	Apartment,	3	2	Fusible plug; check in feed,	Complied.
Boston Leasehold Co.,	Apartment,	6	5	Larger safety valve; repair pressure gauge; fusible plug; check and stop valve in returns; stop valve in main steam pipe.	Complied.
Boston Leasehold Co.,	Apartment,	3	3	Larger safety valve; fusible plug; check in returns,	Complied.
Boston Leasehold Co.,	Apartment,	5	5	Larger safety valve; new handles on two try cocks; fusible plug; check in returns and feed.	Complied.
Boston Leasehold Co.,	Apartment,	5	5	Larger safety valve; repair pressure gauge; fusible plug; check in returns and feed pipe.	Complied.
Boston Leasehold Co.,	Apartment,	6	6	Larger safety valve; handles on two try cocks; repair pressure gauge; check in returns and feed; fusible plug.	Complied.
Boston Leasehold Co.,	Apartment,	7	6	Larger safety valve; repair steam gauge; repair setting; fusible plug; check in returns and feed.	Complied.
Boston Leasehold Co.,	Apartment,	5	5	Try cocks; fusible plug; repair setting; check in feed and returns,	Complied.
Boston Leasehold Co.,	Apartment,	6	6	Change blow pipe; check in returns and feed; siphon; repairs in setting; fusible plug.	Complied.
Boston Leasehold Co.,	Apartment,	3	2	Larger safety valve; fusible plug,	Complied.
Boston Leasehold Co.,	Apartment,	8	7	Larger safety valve; stop valve in main steam pipe; fusible plug; two check and two stop valves in main returns.	Complied.
Boston Leasehold Co.,	Apartment,	3	3	Larger safety valve; repair steam gauge; fusible plug,	Complied.
Boston Leasehold Co.,	Apartment,	2	2	Larger safety valve; fusible plug,	Complied.
Boston Leasehold Co.,	Apartment,	3	2	Try cocks; fusible plug,	Complied.
Boston Leasehold Co.,	Apartment,	2	2	Try cocks; fusible plug,	Complied.

Digitized by Google

Boiler Inspection Report — Continued.

NAME.	Building Used for—	Defects Found. Total.	Defects Found. Dangerous.	Orders Given.	Compliances.
Boston — Con.					
Boston Leasehold Co.,	Apartment,	3	2	Try cocks; fusible plug,	Complied.
Boston Leasehold Co.,	Apartment,	2	2	Try cocks; fusible plug,	Complied.
Boston Leasehold Co.,	Apartment,	6	5	Stop valve in main steam pipe; fusible plug; check in feed; stop valve and check in returns.	Complied.
Boston Leasehold Co.,	Apartment,	7	5	Stop valve in main steam pipe; fusible plug; check in feed; stop and check valve in returns.	Complied.
Boston Leasehold Co.,	Apartment,	6	5	Stop valve in main returns; stop valve in main steam pipe; fusible plug; check in returns and feed.	Complied.
Boston Leasehold Co.,	Apartment,	7	6	Larger safety valve; stop valve, main steam pipe; stop and check valves, main returns; fusible plug; brace in crown sheet.	Complied.
Boston Leasehold Co.,	Apartment,	6	5	Stop valve in main steam pipe; fusible plug; check in feed and returns; stop valve, main returns.	Complied.
Boston Leasehold Co.,	Apartment,	7	5	Stop valve, main returns; fusible plug; check in returns and feed; stop valve in main returns.	Complied.
Boston Leasehold Co.,	Apartment,	5	4	Repair leaks in two section joints; fusible plug; check in returns and feed.	Complied.
Boston Leasehold Co.,	Apartment,	4	4	Fusible plug; check in returns and feed; change stop valve in returns.	Complied.
Boston Leasehold Co.,	Apartment,	5	4	Fusible plug; check in returns and feed; change stop valve in main returns.	-
J. W. Smith,	Hotel,	2	2	Change blow pipe; fusible plug,	Complied.
E. Meiusett,	Hotel,	2	2	Drain cock and nipple in siphon,	Complied.
Tay Edwards,	Apartment,	8	7	Change safety valve; check in returns and feed; repair dry sheet; fusible plug; repair leak in seam; repair setting.	Complied.
Boston Leasehold Co.,	Apartment,	6	5	Fusible plug; check in returns and feed; repair leak in seam; larger safety valve.	Complied.
Boston Leasehold Co.,	Apartment,	5	4	Fusible plug; check in feed and returns; larger safety valve,	Complied.
Boston Leasehold Co.,	Apartment,	5	4	Larger safety valve; fusible plug; check in feed; repair leak in sectional joint.	Complied.

Digitized by Google

C. A. Bonnelle,	Apartment,	5	5	Larger safety valve; fusible plug; check in returns; brace in crown sheet.	Complied.
Dr. White,	Apartment,	2	2	Fusible plug; check in feed,	Complied.
Dr. White,	Apartment,	2	2	Fusible plug; check in feed,	Complied.
Geo. E. Howe,	Apartment,	3	2	Fusible plug; check in feed,	Complied.
E. W. Simmons,	Apartment,	3	2	Fusible plug; check in feed,	Complied.
Dr. Whiting,	Apartment,	5	4	Larger safety valve; fusible plug; check in feed and returns,	Complied.
Dr. Whiting,	Apartment,	5	4	Larger safety valve; fusible plug; check in feed and returns,	Complied.
W. S. & F. Edmands,	Apartment,	12	8	Two boilers; fusible plug in each; two larger safety valves; two checks in feeds and returns each.	Complied.
F. W. Giddins,	Apartment,	6	4	Larger safety valve; fusible plug; check in feed and returns,	Complied.
Henry W. Tombs,	Apartment,	2	2	Try cocks; fusible plug,	Complied.
Henry W. Tombs,	Apartment,	6	6	Larger safety valve; try cocks; change steam gauge; fusible plug; check and stop valve in returns.	Complied
Mrs. Jane Avery,	Apartment,	1	1	Fusible plug,	Complied.
Henry W. Toombs,	Apartment,	2	2	Fusible plug; check in returns and feed,	Complied.
Israel Nessen,	Apartment,	4	4	Check in feed; check and stop valve in returns; stop valve in main steam pipe.	Complied.
Elvord Bros.,	Apartment,	5	4	Check in feed; check and stop valve in returns; stop valve in main steam pipe.	Complied.
Eugene McDonald,	Apartment,	4	4	Check in feed; check and stop valve in main returns; stop valve in main steam pipe.	Complied.
Mrs. Pierce,	Apartment,	7	7	Larger safety valve; try cocks; change steam gauge; fusible plug; check and stop valve in returns; stop valve in main steam pipe.	Complied.
Robert Howard,	Apartment,	8	7	Larger safety valve; change blow pipe; change steam gauge; fusible plug; check and stop valve returns.	Complied.
Robert Howard,	Apartment,	6	6	Larger safety valve; try cocks; change steam gauge; fusible plug; check and stop valve in returns; stop valve main steam pipe.	Complied.
Mrs. Geo. M. Reed,	Apartment,	9	7	Larger safety valve; try cocks; change steam gauge; fusible plug; check and stop valve in main returns; stop valve, main steam pipe.	Complied.
Clarance H. Poor,	Apartment,	7	6	Larger safety valve; try cocks; fusible plug; check and stop valve in main returns; stop valve, main steam pipe.	Complied.

Digitized by Google

Boiler Inspection Report — Concluded.

NAME.	Building Used for —	Defects Found.		Orders Given.	Compliances.
		Total.	Dangerous.		
Boston — Con.					
A. Blanchard,	Apartment,	7	7	Larger safety valve; change blow pipe; siphon; repair setting; fusible plug; stop and check valve in returns.	Complied.
W. H. Quincy & Co.,	- -	2	2	Repair fire box; fusible plug,	Complied.
W. H. Quincy & Co.,	Apartment,	9	9	Three boilers; fusible plug each; stop valve in returns each; stop valve in main steam pipe each.	Complied.
Albert L. Jewell,	Apartment,	3	3	Fusible plug; stop valve in main steam pipe and main returns,	-
Albert L. Jewell,	Apartment,	10	10	Five boilers; stop valve in main steam pipe and returns in each boiler.	Complied.
H. A. Jorden,	Apartment,	2	2	Stop valve in main steam pipe and main returns,	Complied.
G. B. Haskell,	Apartment,	4	3	Three boilers; larger safety valve on each boiler,	Complied.
P. & J. Besse,	Apartment,	7	5	Two boilers; larger safety valve and fusible plug in each boiler; check valve in one boiler.	Complied.
S. D. Whitimore,	Apartment,	3	3	Larger safety valve; fusible plug; check in main returns,	Complied.
G. B. Haskell,	Apartment,	11	9	Larger safety valve; fusible plug; check in returns in each boiler,	Complied.
Bangs & Wells,	Apartment,	3	3	Larger safety valve; fusible plug; check in returns,	Complied.
Parker Doherty,	Apartment,	2	2	Stop valves in two main returns,	Complied.

Digitized by Google

Report of Inspector Dyer.

Districts 1 and 3.

Sir: — I have the honor to submit a report of the work done during the five months which I have been connected with the department.

I have found owners of boilers generally willing to comply with the requirements of the law, and anxious that everything consistent with safety should be done. Nearly every order has been complied with in a reasonable length of time, and in no case that I can recall has any individual shown a disposition to evade the law. Much time is necessarily consumed in locating boilers, and I have found many people operating boilers who have never heard of the law in relation to reporting the same to the chief of this department. Many others confuse the fire insurance on the plant with the boiler insurance, and hence fail to report for that reason.

Summary of Examinations.

Applicants for license examined,		26
Licenses granted: —		
Third class,	3	
Special,	9	
Total licenses,	12	
Licenses refused,		14

Summary of Inspections.

Boilers inspected,	306
Number of defects found,	1,023
Number of dangerous defects,	369
Number of boilers ordered repaired,	192
Number of boilers condemned,	6

Digitized by Google

Boiler Inspection Report.

DISTRICTS Nos. 1 AND 3.

NAME.	Building Used for —	Defects Found. Total.	Defects Found. Dangerous.	Orders Given.	Compliances.
Cambridge.					
Latin School, boiler No. 1,	School,	1	-	None,	-
Latin School, boiler, No. 2,	School,	1	-	None,	-
English High School, No. 1,	School,	-	-	None,	-
English High School, No. 2,	School,	-	-	None,	-
City Cambridge, boiler No. 1,	Police station,	-	-	None,	-
City Cambridge, boiler No. 2,	Police station,	-	-	None,	-
City Cambridge,	Washington school,	3	1	Raise water column,	Complied.
City Cambridge,	Engine No. 4,	2	2	Raise water column; put in fusible plug,	Complied.
City Cambridge,	Old engine house,	3	1	Raise water column,	Complied.
City Cambridge,	Shepard school,	3	1	Raise water column,	Complied.
City Cambridge,	Chemical No. 2,	3	3	Put in fusible plug; checks in returns; change damper connections,	Complied.
Cambridge, Russell School, No. 1,	School,	1	1	Raise water column,	Complied.
Cambridge, Russell School, No. 2,	School,	1	1	Raise water column,	Complied.
Adolph Sommer,	Leather dressing,	4	1	Put in fusible plug,	Complied.
East End Union, No. 1,	Gymnasium,	2	2	Put in checks in returns,	Complied.
East End Union, No. 2,	Gymnasium,	2	2	Put in fusible plug,	Complied.

Digitized by Google

J. Roughan, boiler No. 1,	Coal shed,	2	-	None,	-
J. Roughan, boiler No. 2,	Coal shed,	4	-	None,	-
J. Roughan, boiler No. 3,	Coal shed,	4	-	None,	-
G. R. Southwick,	Offices,	6	3	Raise water column; change damper connections,	Complied.
Boston Bridge Works,	Bridge works,	7	-	Apply pressure of one hundred and twenty pounds,	-
Police Station, boiler No. 1,	Police station,	2	-	None,	-
Police Station, boiler No. 2,	Police station,	2	-	None,	-
Engine No. 6, boiler No. 1,	Engine house,	1	1	Put in fusible plug,	Complied.
Engine No. 6, boiler No. 2,	Engine house,	1	1	Put in fusible plug,	Complied.
Cambridge,	Willard school,	3	-	None,	-
Cambridge,	Engine No. 2,	2	2	Change damper connections; put in fusible plug,	Complied.
Cambridge,	Engine No. 7,	1	1	Put in fusible plug,	Complied.
Cambridge,	Taylor school,	3	-	None,	-
Cambridge,	Engine No. 3,	3	1	Change damper connections,	Complied.
Cambridge,	Station No. 3,	-	-	None,	-
Cambridge,	Ladder No. 2,	4	1	Raise water column,	Complied.
Cambridge,	Engine No. 5,	1	-	None,	-
Charles River Stone Works, No. 2,	Stone works,	6	1	Repair front seam,	Complied.
Cambridge, boiler No. 1,	Almshouse,	4	1	Put in fusible plug,	Complied.
Cambridge, boiler No. 2,	Almshouse,	2	1	Put in fusible plug,	Complied.
Cambridge,	Gore school,	1	1	Put checks in returns,	Complied.
Wetmore, Pride Co.,	Jelly factory,	8	2	Two boilers; renew both fusible plugs,	Complied.

Digitized by Google

Boiler Inspection Report — Continued.

NAME.	Building Used for —	Defects Found.		Orders Given.	Compliances.
		Total.	Dangerous.		
Cambridge — Con.					
Dennis, Thompson, Pierce Co.,	Coal yard,	-	-	None,	-
Jas. H. Roberts & Co.,	Machine shop,	5	1	Renew fusible plug,	Complied.
Fred. H. Holton,	Metal works,	9	1	Renew fusible plug,	Complied.
Duff Spring Co.,	Spring manufacturing,	5	1	Renew fusible plug,	Complied.
E. D. Brooks,	Carpenter shop,	5	2	Renew fusible plug; inoperative try cock,	Complied.
Mastro Mastrangialo,	Tenements,	4	3	No check in returns; try cock inoperative; renew fusible plug,	Complied.
Coleman Bros.,	Coal yard,	8	2	Renew fusible plug; reduce pressure,	Complied.
Estate of J. A. Holmes,	Tenements,	5	1	Put in new tubes; apply pressure of sixty pounds,	Complied.
Miller & Shaw,	Machine shop,	6	1	Renew fusible plug,	Complied.
Universalist Church,	Church,	5	2	Raise water column; put in new tubes,	Complied.
Austin Ford & Son,	Stone yard,	2	-	None,	-
Cambridge Gas Co.,	Gas house,	6	-	None,	-
Charles River Stone Co., No. 1,	Stone works,	7	2	Raise water column; apply pressure of one hundred and thirty pounds.	Complied.
Metropolitan Storage Co.,	Storehouse,	3	-	None,	-
Public Library, boiler No. 1,	Library,	4	-	None,	-
Public Library, boiler No. 2,	Library,	4	2	Put in new tubes; change weight on safety valve,	Complied.
D. Bartlett,	Pottery,	6	3	Put in fusible plug; repair brickwork in fire-box; repair return pipes.	Complied.

Digitized by Google

Powell Printing Co.,	Printing,	8	3	Change check and stop valve in feed pipe; clean out connections to water column; repair brick work in fire-box.	Complied.
Chas. Waugh & Co.,	Carriage factory,	6	2	Change check and stop valve in feed pipe; repair brick work,	Complied.
H. Purcell,	Cement factory,	5	3	Put in fusible plug; water column connections cleaned out; repair try cocks.	Complied.
Cambridge Gas Co.,	Gas house,	7	-	None,	-
City Hall, boiler No. 1,	City Hall,	-	-	None,	-
City Hall, boiler No. 2,	City Hall,	-	-	None,	-
Harvard School, No. 1,	School,	-	-	None,	-
Harvard School, No. 2,	School,	-	-	None,	-
Cambridge, boiler No. 2,	Pumping station,	1	1	Put in fusible plug,	Complied.
Cambridge, boiler No. 3,	Pumping station,	6	2	Remove scale; clean boiler thoroughly,	Complied.
Cambridge, boiler No. 4,	Pumping station,	6	1	Put in fusible plug,	-
Prospect Union Association, No. 1,	Educational Society,	2	2	Put in new water glass; put in fusible plug,	Complied.
Prospect Union Association, No. 2,	Educational Society,	4	4	Put in safety valve; put in new try cock; put in new pressure gauge; put in fusible plug.	-
A. Z. Cowan,	Creamery,	3	-	None,	-
T. H. Raymond,	Offices,	3	2	Put check in returns; put in fusible plug,	Complied.
T. H. Raymond,	Stores,	3	1	Remove obstruction so safety valve can have opening of at least three-quarters of an inch.	Complied.
Earl & Gilmore,	Laundry,	-	-	None,	-
H. Fitzgerald, No. 1,	Offices,	7	3	Repair brick work in fire-box; put in new fusible plug; lower blow-off pipe.	-
H. Fitzgerald, No. 2,	Offices,	2	2	No orders; going out of use,	-
Pilgrim church, Nos. 1 and 2,	Church,	4	-	None,	-
Reed estate,	Stores,	5	1	Put in fusible plug,	-
Miller & Shaw,	Machine shop,	-	-	None,	-

Digitized by Google

Boiler Inspection Report — Continued.

NAME.	Building Used for —	Defects Found. Total.	Defects Found. Dangerous.	Orders Given.	Compliances.
Chelsea.					
Wm. Norris & Son,	Soap works,	6	3	Raise water column; repair brick work in fire-box; reduce pressure from seventy to forty pounds.	Complied.
D. R. Pruden,	Eye glass case works,	3	1	Put in fusible plug,	Complied.
Gustave Ollson,	Gas Co.,	8	4	Put in larger safety valve; repair try cocks (2); repair brick work in fire-box.	Complied.
Phillips & Hodgdon,	Coal and wood,	6	5	New hand-holes; new fusible plug; bottom head made tight; leaky seams made tight.	Condemned.
Chas. H. Pike & Co.,	Printing,	2	2	Put in new water glass; repair try cock,	Complied.
F. G. Taylor,	Wood-work,	4	1	Put in fusible plug,	Complied.
Chelsea Clock Co.,	Factory,	-	-	None,	-
Chas. F. Kelley & Co.,	Shoe factory,	3	-	None,	-
Chapman & Soden,	Roof materials,	3	-	None,	-
G. A. R. Association,	Hall and stores,	5	2	Raise water column; change damper connections,	Complied.
J. M. Hubley,	Tenements,	2	-	None,	-
G. A. Drysdale,	Iron bedsteads,	4	-	None,	-
L. K. Husted,	Laundry,	5	-	None,	-
Roger Walton,	Bakery,	4	2	Repair try cock; put in fusible plug,	Complied.
Cummings Estate,	Tenements,	2	-	None,	-
Hersom Bros.,	Ice cream factory,	1	1	Put lighter weight on safety valve,	Complied.
B. J. Richardson,	Varnish works,	1	-	None,	-

Digitized by Google

Chelsea,	Broadway school,	10	4	Repair safety valve; repair steam gauge; have hand-hole cut in back end; raise water column.	Complied.
Metropolitan Coal Co.,	Lighter, No. 4,	4	1	Put in fusible plug,	Complied.
Metropolitan Coal Co.,	Wood sawing,	7	4	Repair try cocks, three cracks in top head; badly corroded tubes in bad condition; no fusible plug.	Condemned.
Metropolitan Coal Co.,	Lighter, No. 10,	4	1	Put in fusible plug,	Complied.
Metropolitan Coal Co.,	Lighter, A. S. Conant,	3	2	Put in fusible plug; crack in fire-box,	Condemned.
Boston Blacking Co.,	Factory,	5	1	Put in fusible plug,	Complied.
Metropolitan Coal Co.,	Lighter, No. 3,	5	1	Put in fusible plug,	Complied.
Metropolitan Coal Co.,	Lighter, Maud Pye,	3	1	Put in fusible plug,	Complied.
E. Tyrrell,	Dye house,	2	1	New safety valve,	Complied.
J. M. Mason,	Machine shop,	4	-	None,	-
First Baptist Church,	Church,	3	1	Repair brick work in fire-box,	Complied.
D. F. Buckley,	Soap maker,	5	-	None,	-
Metropolitan Coal Co.,	Upright,	2	-	None,	-
Metropolitan Coal Co.,	Lighter, No. 6,	3	1	Put in fusible plug,	Complied.
Chelsea,	Bloomingdale school,	3	2	Repair feed pipe; raise water column,	Complied.
Chelsea,	Cary school,	3	1	Repair leak in seam between sections,	Complied.
S. K. Lovewell & Co.,	Machine shop,	1	1	Raise water column,	Complied.
Collins & Lee,	Fish canners,	2	-	None,	-
E. R. Cheney,	Dwelling house,	1	1	Raise water column,	Complied.
Metropolitan Coal Co.,	Lighter, No. 8,	2	1	Put in fusible plug,	Complied.
Chelsea,	High school, boilers, Nos. 1 and 2.	8	6	Raise both water columns; new tubes in place of those badly pitted in No. 1; brick work repaired in fire-box; damper connection changed; checks in feed changed.	Complied.
Chelsea,	Spencer school,	2	-	None,	-

Digitized by Google

Boiler Inspection Report — Continued.

NAME.	Building Used for —	Defects Found.		Orders Given.	Compliances.
		Total.	Dangerous.		
Chelsea — Con.					
Phillips & Hodgdon,	Wood sawing,	3	1	Cut hand-hole in shell,	Complied.
H. F. Kiley,	Hoister, No. 1,	2	1	Cut hand-hole opposite crown sheet,	Complied.
H. F. Kiley,	Hoister,	3	1	Repair try cock,	Complied.
H. F. Kiley,	Hoister,	3	1	Put in fusible plug,	Complied.
Emily Loud,	Shoe factory,	6	1	Repair dry plate,	Complied.
James Higginbottom,	Laundry,	6	4	Repair try cock; repair fire-box; leaky rivets made tight; repair shell where corroded; new bottom both shell and fire-box.	Condemned.
James Higginbottom (new boiler),	Laundry,	-	-	None,	-
Chelsea,	Armory,	3	1	Put in fusible plug,	Complied.
Chelsea,	Engine No. 3,	7	4	Raise water column; put in fusible plug; change damper connections; repair brick work in fire-box.	Complied.
Metropolitan Coal Co.,	Lighter No. 1,	6	3	Put on water pressure to one hundred and thirty pounds; hand-hole reinforced; repair try cock.	Complied.
Chelsea,	Engine No. 2,	3	-	None,	-
Chelsea,	Hose No. 4,	3	3	Put in fusible plug; repair blow-off valve; put checks in returns,	Complied.
A. E. Russell,	Machine shop,	4	1	Put in fusible plug,	Complied.
Metropolitan Coal Co.,	Lighter No. 2,	7	1	Blister on head cut out; hole drilled in head; water pressure put on to one hundred and twenty pounds.	Complied.
Metropolitan Coal Co.,	Lighter No. 7,	3	-	Apply pressure to one hundred and twenty pounds,	-
S. J. Meaney,	Soap works,	1	-	Put in fusible plug,	-
Evans & Co.,	Wood sawing,	3	1	Put in fusible plug; apply water pressure of one hundred and thirty-five pounds.	Complied.

Digitized by Google

Rufus Frost Hospital,	Hospital,	6	3	Put on smaller safety balls; put check in returns; put stop valve in steam pipe.	Complied.
Metropolitan Coal Co.,	Lighter No. 5,	1	1	Put in new fusible plug; apply water pressure to one hundred and thirty-five pounds.	Complied.
Metropolitan Coal Co.,	Lighter Robena,	4	1	Put in new fusible plug; apply water pressure to one hundred and twenty pounds.	Complied.
H. N. Crohurst,	Hotel,	6	3	Repair safety valve; put checks in returns; repair brick work,	Complied.
Everett.					
F. G. Taylor,	Wood work,	4	1	Renew fusible plug,	Complied.
B. J. Richardson,	Varnish work,	1	-	None,	-
John D. Ansley,	Foundry,	4	1	Repair safety valve,	Complied.
Everett, boilers Nos. 1 and 2,	Mt. Washington School,	2	-	None,	-
Everett, auxiliary boiler,	Mt. Washington School,	1	-	None,	-
Everett, boiler No. 1,	Centre School,	3	2	Repair brick work in fire-box; put in new tubes,	Complied.
Everett, boiler No. 2,	Centre School,	4	2	Repair brick work in fire-box; put in new tubes,	Complied.
Henry Felton,	Laundry,	2	1	Make safety valve operative,	Complied.
First Baptist Church,	Church,	1	1	Put in larger safety valve,	Complied.
H. D. Gloyd,	Preserves,	1	-	None,	-
Y. M. C. Association,	Christian association,	4	2	Repair brick work on side and in fire-box,	Complied.
A. H. Kimball,	Wood work,	5	4	Put in new tubes; raise water column; put in fusible plug; repair dry plate.	Complied.
C. S. Hapgood,	City hall,	4	2	Repair feed pipe; repair brick work in fire-box,	-
Everett,	Stone crusher,	1	-	None,	-
Everett,	Pumping station,	1	-	None,	-
A. H. Evans,	Offices,	3	-	None,	-
Everett, boilers Nos. 1, 2 and 3,	Devens school,	-	-	None,	-

Digitized by Google

Boiler Inspection Report — Continued.

NAME.	Building Used for —	Defects Found.		Orders Given.	Compliances.
		Total.	Dangerous.		
Everett — Con.					
Everett, boiler No. 1,	High school,	3	1	Reinforce hand-hole,	Complied.
Everett, boiler No. 2,	High school,	4	2	Raise water column; put in fusible plug,	Complied.
First Congregational Church,	Church,	6	4	Put check into returns; change damper connections; put in fusible plug; put in larger safety valve.	Complied.
Everett,	Nichols school,	1	-	None,	-
Everett, boilers Nos. 1 and 2,	Glendale school,	4	-	None,	-
Everett, auxiliary boiler,	Glendale school,	1	1	Renew fusible plug,	Complied.
Everett, boilers Nos. 1 and 2,	Winslow school,	6	-	None,	-
Everett, auxiliary boiler,	Winslow school,	1	1	Put in fusible plug,	Complied.
Everett, boilers Nos. 1 and 2,	Webster school,	6	-	None,	-
Everett, auxiliary boiler,	Webster school,	1	1	Change damper connection,	Complied.
Everett boiler, No. 1,	Warren school,	2	-	None,	-
Everett auxiliary boiler,	Warren school,	1	1	Put in fusible plug,	Complied.
Everett boilers, Nos. 1 and 2,	Lincoln school,	-	-	None,	-
Bartlett & Hayward,	Gas works,	3	1	Put in fusible plug,	Complied.
Malden.					
W. F. Heerkloss,	Stores and tenements,	3	2	Put in new fusible plug,	Complied.
R. B. Young,	Laundry,	5	-	Put in new tubes,	Complied.

Digitized by Google

Collins & Co.,	Knitting mill,	5	2	Put in fusible plug; cut hand-hole in back end,	Complied.
W. H. Huggins,	Coal tar works,	4	4	Repair fire-box; put in new hand-hole; renew fusible plug; repair shell.	Complied.
E. E. Locke,	Wood sawing,	2	-	None,	-
C. T. Joslyn,	Maple syrup works,	2	1	Repair fire-box,	Complied.
John A. Lampkin,	Wood works,	4	1	Repair leaky stay bolts,	Complied.
F. E. Greene,	Machine shop,	2	-	None,	-
Kernwood Club,	Club house,	5	2	Hole to back connection made larger; change damper connection,	Complied.
E. Neal,	Wood sawing,	4	3	Put in hand-hole at crown sheet; repair try cock; repair water glass.	Complied.
D. J. Desmond,	Dye house,	3	1	Renew fusible plug,	Complied.
Clark Hose Co.,	Hose weaving,	9	1	Renew fusible plug,	Complied.
Rev. R. Neagle, boiler No. 1,	Columbus school,	4	1	Change damper connection,	Complied.
Rev. R. Neagle,	Immaculate Conception school.	4	2	Repair water glass valve; change damper connections,	Complied.
Faulkner,	Church,	2	2	Cut hand-holes; clean out shell at bottom,	Complied.
Mrs. E. H. Steele,	Laundry,	4	3	Cut hand-hole; renew fusible plug; put in water glass,	Complied.
W. Bettison,	Laundry,	4	1	Remove scale from tubes and shell,	Complied.
Commonwealth Plating Co.,	Electro plating,	2	-	None,	-
C. Morris Tredick,	Wood sawing,	5	1	Repair brick work,	Complied.
W. H. Barrett,	Opera house,	9	5	Put in new tubes; repair brick work; make leaky seams tight; repair connection to water column; subject boiler to water pressure.	Complied.
Malden boilers, Nos. 1 and 2,	West school,	-	-	Boiler insured,	-
Rev. R. Neagle, boiler No. 2,	Columbus school,	3	2	Put in larger safety valve; cut hand-hole in boiler,	Complied.
J. S. Foster,	Stone crusher,	2	-	None,	-
Clifton Williams,	Laundry,	8	2	Make patch tight in fire-box; reduce pressure to sixty-five pounds,	Complied.

Digitized by Google

Boiler Inspection Report — Continued.

NAME.	Building Used for —	Defects Found. Total.	Defects Found. Dangerous.	Orders Given.	Compliances.
Malden — Con.					
W. H. Huggins,	Coal tar works,	-	-	None,	-
Rev. R. Neagle,	Parochial residence,	5	3	Put in new tubes; repair brick work; put checks in returns,	Complied.
Rev. R. Neagle,	Convent,	5	3	Put in man-hole; repair brick work; put checks in returns,	Complied.
Malden, boilers Nos. 1 and 2,	Centre school,	8	3	Put new tubes in both; new elbow in blow-off,	Complied.
Malden, boilers Nos. 1, 2 and 3,	Lincoln school,	11	4	Have weights on safety valves changed for lighter ones on boilers 1 and 2; repair brick work in fire-box in No. 2; put in fusible plug in No. 3.	Complied.
Tate & Co.,	Cordage factory,	8	5	Patch fire-box; put in fusible plug; repair two try cocks; change blow-off.	Complied.
Malden, boilers Nos. 1 and 2,	Linden school,	5	1	Put new tubes in No. 2,	Complied.
Malden auxiliary,	Linden school,	2	2	Put checks in returns; renew fusible plug,	Complied.
E. D. Burd,	Cordage factory,	10	7	Put in new bottom; new fusible plug; plug cock to blow-off; raise water column.	New boiler.
F. N. Joslyn & Co.,	Stores,	2	2	Put check in returns; new fusible plug,	Complied.
Medford.					
J. N. Cowen & Co.,	Holster,	3	1	Put in fusible plug,	Complied.
E. Teele & Co.,	Carriage factory,	3	1	Put in fusible plug,	Complied.
Medford,	Police station,	3	3	Put in fusible plug; put in man-hole; change damper connections,	Complied.
S. C. Lawrence,	Offices,	3	1	Put in fusible plug,	Complied.
Clark & Abbott,	Stores and tenements,	1	1	Put in fusible plug,	Complied.

Digitized by Google

H. C. Spear,	Bottler,	4	2	Put in fusible plug; put in new tube,	Complied.
Medford, boilers Nos. 1 and 2,	High school,	4	-	None,	-
Estate of C. H. Day,	Stable,	3	1	Repair try cock,	Complied.
Medford,	City stables,	3	-	None,	-
Medford,	Steam drill,	3	-	None,	-
Medford,	Stone crusher,	3	-	None,	-
Oliver Whyte Co.,	Wire works,	3	1	Repair brick work in fire-box,	-
C. Whitehead,	Chemical works,	4	-	None,	-
C. Williams,	Laundry,	-	-	None,	-
Medford, boilers Nos. 1 and 2,	Tufts school,	-	-	None,	-
Medford,	Everett school,	2	2	Put checks in returns; put in fusible plug,	Complied.
Medford,	James school,	2	2	Put in fusible plug; put checks in returns,	Complied.
Medford, boiler No. 1,	Craddock school,	3	1	Make door to back connection larger,	Complied.
Medford, auxiliary boiler,	Craddock school,	2	2	Put in fusible plug; put checks in returns,	Complied.
Medford,	Gleason school,	1	-	None,	-
Medford,	Stone crusher,	4	2	Renew fusible plug; make door to back connection larger,	Complied.
Medford,	Chemical A,	4	3	Put in fusible plug; repair valve at water glass; make leaky seams tight.	Complied.
Medford,	Chemical B,	4	4	Put in fusible plug; stop valve put in steam pipe; put checks in returns; change damper connection.	Complied.
Medford,	Hose No. 4,	3	2	Put check in returns; put stop valve in steam pipe,	Complied.
Revere.					
J. J. Hurley,	Flying horses,	3	1	Put in fusible plug,	Complied.
N. L. Libby,	Laundry,	3	2	Repair fire-box; cut hand-hole in crown sheet,	Complied.

Digitized by Google

Boiler Inspection Report — Continued.

NAME.	Building Used for —	Defects Found.		Orders Given.	Compliances.
		Total.	Dangerous.		
Revere — Con.					
G. L. Layman,	Flying horses,	8	4	Put in fusible plug; repair fire-box; make leaky tubes tight; lower blow-off valve.	Complied.
James Little,	Flying horses,	-	-	None,	-
Edw. Selcman,	Flying horses,	1	1	Put in fusible plug,	Complied.
Somerville.					
Amos Haynes,	Vinegar works,	2	-	None,	-
E. O. Arnold,	Carpet cleaning,	4	1	Repair try cock,	Complied.
I. H. Brown,	Planing mill,	2	-	None,	-
Sam'l. B. Locke,	Foundry,	5	1	Repair front head,	Complied.
Somerville Journal,	Newspaper,	3	1	Renew fusible plug,	Complied.
W. K. Lewis & Bro.,	Pickle factory,	6	1	Repair safety valve,	Complied.
W. J. Lamb,	Sugar works,	4	1	Put in fusible plug,	Complied.
G. M. Stevens,	Tenements,	7	3	Put in fusible plug; change damper connections; repair fire-box,	Complied.
A. N. Hardy,	Tenements,	5	2	Put checks in returns; repair brick work in fire-box,	Complied.
Unitarian Church, Nos. 1 and 2,	Church,	10	3	Put in one fusible plug, No. 2; change damper connections in both boilers.	Complied.
L. D. Howe,	Pork packer,	3	1	Put in fusible plug,	Complied.
G. W. Norton,	Soap works,	4	1	Repair try cock,	Complied.
C. E. Barry,	Machine shop,	7	3	Raise water column; put in fusible plug; hand-hole reinforced,	Complied.

Digitized by Google

Somerville,	Engine No. 1,	3	1	Renew fusible plug,	Complied.
Somerville,	Engine No. 2,	1	-	None,	-
Somerville,	Engine No. 4,	2	1	Put checks in returns,	Complied.
Somerville,	Ladder No. 2,	2	2	Put in fusible plug; put stop valve in steam pipe,	Complied.
Somerville,	Hose No. 5,	5	2	Repair brick work; change damper connection,	Complied.
Somerville,	Public library,	6	-	None,	-
Central Club,	Club house,	4	-	None,	-
American Tube Works, No. 1,	Tube works,	5	-	None,	-
American Tube Works, No. 2,	Tube works,	3	-	None,	-
American Tube Works, No. 3,	Tube works,	4	-	None,	-
American Tube Works, No. 4,	Tube works,	4	1	Renew fusible plug,	Complied.
American Tube Works, No. 5,	Tube works,	5	1	Renew fusible plug,	Complied.
American Tube Works, No. 6,	Tube works,	6	-	None,	-
J. Roughan, No. 1,	Coal shed,	1	-	None,	-
J. Roughan, No. 2,	Coal shed,	2	-	None,	-
J. Roughan, No. 3,	Coal shed,	3	1	Put in fusible plug,	Complied.
Webster.					
H. N. Slater, No. 1,	Boiler house,	4	-	None,	-
H. N. Slater, No. 2,	Boiler house,	5	-	None,	-
H. N. Slater, No. 8,	Boiler house,	6	1	Repair brick work in fire-box,	Complied.
H. N. Slater, No. 9,	Boiler house,	7	1	Repair brick work in fire-box and combustion chamber,	Complied.

Digitized by Google

Boiler Inspection Report — Concluded.

NAME.	Building Used for —	Defects Found.		Orders Given.	Compliances.
		Total.	Dangerous.		
Webster — Con.					
H. N. Slater, No. 6,	Boiler house,	5	1	Overhaul braces,	Complied.
H. N. Slater, No. 7,	Boiler house,	4	–	None,	–
L. R. Eddy, Nos. 1 and 2,	Offices,	4	2	Put fusible plug in each,	Complied.
Hill & Patterson,	Opera house,	10	6	Put in fusible plug; repair brick work; repair feed pipe; put checks in returns; change damper connections; put in new safety valve.	Complied.
Webster,	Engine house,	7	3	Renew fusible plug; repair brick work; change damper connections.	Complied.
H. N. Slater,	Box shop,	7	1	Put in fusible plug,	Complied.
G. H. Bartlett,	Laundry,	5	4	Raise water column; repair brick work; put in fusible plug; test boiler to ninety pounds.	Complied.
Methodist Church,	Church,	5	2	Renew fusible plug; change damper connections,	Complied.
John Cort,	Printing,	5	2	Renew fusible plug; put on larger safety valve,	Complied.
Austin Shumway,	Stores,	6	4	Put stop valve in steam pipes; change damper connections; put check in returns; put in fusible plug.	Complied.
Universalist Church,	Church,	4	3	Stop valve put into steam pipe; put checks in returns; renew fusible plug.	Complied.
German Hall,	Hall,	1	1	Renew fusible plug,	Complied.
City Hotel,	Hotel,	3	3	Put stop valve in steam pipe; put checks in returns; put in fusible plug.	Complied.
Tiffany's Block,	Stores,	6	3	Put in stop valves in steam pipes; put checks in returns; put in fusible plug.	Complied.
A. J. Bates,	Tenements,	5	4	Put in stop valves in steam pipes; put checks in returns; put in fusible plug; put in new water glass.	Complied.

Digitized by Google

Worcester.					
R. C. Taylor,	Stores and offices,	5	1	Renew fusible plug; shell and tubes to be cleaned; boiler washed out and subjected to pressure of seventy-five pounds.	Complied.
R. C. Taylor,	Stores and offices,	4	1	Renew fusible plug; clean shell and tubes; wash out boiler and subject to pressure of seventy-five pounds.	Complied.
Worcester,	Theatre,	3	-	Have boiler cleaned and washed out, and subject to pressure of seventy-five pounds.	Complied.
Lathrop's Opera House,	Theatre,	6	4	Renew fusible plug; raise water column; put on larger safety valve; have water glass made operative.	Complied.
State Armory, Nos. 1 and 2,	Armory,	7	2	Put new tubes in No. 1; fusible plug in No. 2,	Complied.
Park Congregational Church,	Church,	8	1	Renew fusible plug,	Complied.

Digitized by Google

Report of Inspector Dyer.

District No. 2.

Sir: — I submit herewith annual report and statement of boilers inspected and engineers and firemen examined.

Summary of Examinations.

Class.	Licenses Applied for.	Licenses Granted.	Renewals Issued.
First class engineers,	98	15	18
Second class engineers,	124	35	4
Third class engineers,	80	68	1
Special engineers,	55	116	4
Hoisting and portable engineers,	7	10	1
Firemen to operate,	232	87	41
Firemen for low pressure,	–	27	–
Special firemen,	–	75	–
Licenses refused,	–	163	–
Total,	596	596	69

New applications received,	508
Licenses revoked,	2
Licenses issued on five-year certificates,	6

Summary of Inspections.

Number of boilers inspected,	229
Number of defects found,	2,101
Number of dangerous defects,	547
Number of boilers ordered repaired,	167
Number of boilers condemned,	4

Digitized by Google

Boiler Inspection Report.

DISTRICT No. 2.

NAME.	Building Used for —	Defects Found.		Orders Given.	Compliances.
		Total.	Dangerous.		
Fall River.					
J. B. Swift & Co.,	Bowling,	3	1	Put in fusible plug,	Complied.
J. D. Flint,	Stores,	12	7	Raise column; repair steam gauge; repair setting; put in fusible plug and check valve.	Complied.
Fall River Real Estate Association,	Stores,	9	5	Put in fusible plug; repair steam gauge; checks in returns and feed; put in one-inch feed pipe.	Complied.
Joseph A. Bowen,	Hoisting,	7	3	Repair gauge glass; cut hand-hole; put in fusible plug,	Complied.
Kelley & Sutcliffe,	Hotel,	2	2	Put in fusible plug and check valve,	Complied.
Y. M. P. T. & B. Society,	Club house,	10	6	Put in fusible plug and check valves in feed and returns,	Complied.
Foresters Building Association,	Halls,	9	5	Put in fusible plug, check valves and stop valves in feed and returns.	Complied.
Citizens' Savings Bank,	Stores and offices,	11	5	Put in new tubes; steam valve; checks and stops in feed and returns.	Complied.
Brow & Mills,	Laundry,	4	-	None,	-
LeBouef & Brault,	Laundry,	13	8	Put on safety valve, blow-off valve, gauge glass, try cocks, steam gauge; check and stop valve in feed pipe; fusible plug.	Complied.
W. C. Powers,	Roll covering,	5	2	Put in new tube; change check to other side of feed valve,	Complied.
M. Heywood & Co.,	Banding mill,	13	7	Put in seven new tubes,	Complied.
Joseph Wild,	Brush shop,	12	4	Applied water pressure, one hundred and twenty-five pounds; put in new tubes and fusible plug.	Complied.
Goss Bros.,	Rope mill,	13	3	Put in new tubes and fusible plug,	Complied.
Albert Ingram,	Dye house,	17	4	Repair safety valve, gauge glass and try cocks; put in fusible plug; apply water pressure of one hundred and twenty-five pounds.	Complied.
McKenzie & Winslow,	Stores,	2	2	Put in fusible plug and check valve in feed pipe,	Complied.

Digitized by Google

Boiler Inspection Report — Continued.

NAME.	Building Used for—	Defects Found. Total.	Defects Found. Dangerous.	Orders Given.	Compliances.
Fall River — Con.					
J. D. Flint,	Stores and halls,	15	9	Two boilers: repair gauge glass, steam gauge and damper regulator; put in fusible plug and check valve in feed pipe.	Complied.
Amy Monarch,	Dye house,	10	2	Repair blow-off valve and try cocks,	Complied.
Y. M. I. A. T. & B. Society,	Club house,	3	-	Two boilers: none,	-
Frederick Scott,	Wood yard,	8	4	Repair try cock; make leaky seams tight under pressure of one hundred and twenty-five pounds.	Complied.
Boys' Club,	Club house,	-	-	Two boilers: none,	-
Boys' Club,	Club house,	2	2	Put check valves in feed pipe,	Complied.
Joseph Fernley,	Reed shop,	9	3	Provide hot water feed; repair gauge glass; put stop valve in feed pipe.	Out of use.
D. H. & W. C. Cornell,	Meat packing,	7	-	None,	-
William Durfee,	Ice house,	-	-	None,	-
Quequechan Club,	Club house,	4	2	Two boilers: put in fusible plugs,	Complied.
Philip R. Porter,	Box works,	3	-	None,	-
Fall River Machine Co.,	Machine works,	51	37	Patch near fire door; put in new tubes; safety valve, fusible plug and stop valve in feed pipe; apply one hundred pounds pressure.	Complied.
Dudevoir, Savoie & Conroy,	Hoisting,	10	3	Repair gauge cocks; put on steam gauge,	Complied.
Sykes Primitive Methodist Church,	Church,	7	4	Put on try cocks; check valves in feed and returns; fusible plug,	Complied.
Convent of Jesus Mary,	School,	11	2	Repair gauge cocks; put check valve in feed pipe,	Complied.
Paul H. Maynard,	Laundry,	4	4	Make rivets and stays tight; put valve in feed pipe; put on inspirator.	Complied.
P. A. Staples,	Merry-go-round,	9	4	Put in fusible plug and hand-hole; repair gauge valves and steam gauge.	Complied.

Digitized by Google

P. A. Staples,	Creamery, etc.,	11	2	Repair try cocks; put in a fusible plug,	Complied.
James T. Bagshaw,	Steam launch,	5	–	None,	–
Joshua Holden,	Wood yard,	7	1	Put valve on blow-off pipe,	Complied.
Charles C. Senay,	Steam launch,	5	3	Repair gauge glass; put stop valve in feed pipe,	Complied.
State Armory,	Armory,	6	1	Put in new grates,	Complied.
County of Bristol,	Court house,	18	4	Two boilers; repair setting; put in new tubes; test to one hundred pounds pressure.	Complied.
First Christian Church,	Church,	9	2	Repair try cocks; put a check valve in feed pipe,	Complied.
Metacomet National Bank,	Bank and offices,	14	–	Two boilers: none,	–
D. H. & W. C. Cornell,	Meat packing,	9	2	Repair feed and blow-off pipes,	Complied.
Philander Borden's heirs,	Stores and offices,	10	2	Repair setting; put in check valve,	Complied.
New Bedford.					
New Bedford Ice Co.,	Ice house,	11	5	Put on try cocks, steam gauge and feed arrangements,	Complied.
Albert T. Brownell,	Hotel,	9	1	Change internal feed pipe,	Complied.
Albert T. Brownell,	Hotel,	2	–	None,	–
T. M. Denham & Bro.,	Shirt works,	13	4	Make boiler and connections tight under one hundred and twenty-five pounds pressure.	Complied.
Charles D. Butte,	Boat shop,	11	6	Repair safety valve; put in fusible plug; blow-off valve; stop in feed pipe; hand hole; clean out leg.	Complied.
F. T. Akin & Co.,	Coal pockets,	10	1	Put in new tubes and make tight under one hundred and twenty-five pounds pressure	Complied.
F. T. Akin & Co.,	Wood yard,	10	1	Put in gauge glass and make tight under one hundred and twenty-five pounds pressure.	Complied.
Willard B. Bennett,	Blacksmith,	10	3	Make gauge glass and cocks tight; put check valve in feed pipe,	Complied.
George L. Hathaway,	Pickle shop,	20	10	Condemned; out of use,	–
Brownell & Co.,	Paint shop,	7	3	Repair try cocks; put in fusible plug; stop valve in feed pipe,	Complied.
N. P. Hayes,	Stores and offices,	1	1	Put check valve in feed pipe,	Complied.

Digitized by Google

Boiler Inspection Report — Continued.

NAME.	Building Used for —	Defects Found. Total.	Defects Found. Dangerous.	Orders Given.	Compliances.
New Bedford — Con.					
City of New Bedford,	Repair shop,	8	1	Put in fusible plug,	Complied.
City of New Bedford,	Repair shop,	8	2	Put in fusible plug and steam gauge,	Complied.
Brightman Bros.,	Paint shop,	10	3	Repair try cocks and stay bolts; cut hand-hole,	Complied.
New Bedford Gas & Edison Light Co.	Gas works,	11	1	Repair safety valve,	Complied.
George L. Brownell,	Carriage works,	12	2	Repair safety valve and setting,	Complied.
City of New Bedford,	Steam drilling,	7	1	Put in fusible plug,	Complied.
City of New Bedford,	Repair shop,	6	1	Put in fusible plug,	Complied.
William E. Smith,	Dye house,	12	5	Repair blow-off valve, gauge glass and setting; put valve in feed pipe.	Complied.
Swift & Hathaway,	Laundry,	8	2	Repair gauge glass,	Complied.
George Kirby, Jr., & Co.,	Paint works,	14	6	Make stays and patch tight; put in new tubes and fusible plug,	Complied.
J. F. Aubertin,	Roller covering,	9	–	None,	–
William Hamer,	Hoisting,	10	3	Put in fusible plug, gauge glass and new tubes; make tight under one hundred and twenty-five pounds pressure.	Complied.
Jenny & Buffington,	Hoisting,	10	1	Put in fusible plug,	Complied.
A. Rogers,	Hoisting,	9	4	Put in hand-holes, gauge glass and fusible plug; repair try cocks; make tight under pressure of one hundred and twenty-five pounds.	Complied.
Moses Denault,	Hoisting,	8	1	Put in fusible plug,	Complied.
John B. Sullivan,	Hoisting,	13	7	Repair leaky rivets, tubes and feed pipe; put in fusible plug,	Complied.
Henry W. Hathaway,	Saw mill,	9	–	None,	–

Digitized by Google

Charles F. Folger,	Chair works,	11	4	Put in new tubes, fusible plug and blow-off pipe in bottom of boiler; repair setting.	Complied.
St. Luke Hospital,	Hospital,	6	2	Two boilers; put check in feed pipe; keep boiler cleaner; fireman not to be away over thirty minutes at a time.	Complied.
St. Luke Hospital,	Hospital,	4	2	Put check in feed pipe; repair setting,	Complied.
Bates, Kirby & Co.,	Stores and offices,	12	5	Test to one hundred and twenty-five pounds pressure; put in new tubes, hand-hole and braces; repair feed pipe.	Complied.
Odd Fellows Building,	Stores and offices,	13	5	Put in new tubes, drip cock and check valve; repair setting and injector.	Complied.
Brett & Simpson,	Soap works,	-	-	None,	-
Thomas Luce & Co.,	Stave works,	15	5	Put in try cocks and door frames; repair setting,	Complied.
George L. Brownell,	Carriage works,	13	5	Repair gauge glass, try cocks, setting and inspirator; put on a steam gauge.	Complied.
Odd Fellows Building,	Stores and offices,	4	4	Lower column; make tight leaky rivets and feed pipe connection,	Complied.
Taunton.					
County of Bristol,	Court house,	8	-	Two boilers,	-
Robert H. White,	Ice house,	7	3	Put in hand-hole; repair gauge glass valves,	Complied.
E. W. Strange & Co.,	Machine shop,	7	3	Apply one hundred and twenty-five pounds pressure; cut a hand-hole; patch leg.	Complied.
County of Bristol,	Prison,	11	1	None,	-
County of Bristol,	Prison,	10	1	None,	-
L. H. Goward,	Meat packing,	8	2	Repair try cocks; put in fusible plug and make tight under one hundred and fifty pounds pressure.	Complied.
Williams Brick Co.,	Brick yard,	12	1	Repair safety valve,	Complied.
Taunton Crucible Co.,	Crucible works,	11	2	Repair blow-off valve; raise water column,	Complied.
J. C. Sproat,	Saw mill,	43	14	Three boilers: put on gauge glasses; fusible plug; repair setting,	Complied.
Charles H. Dean,	Blacksmith,	6	1	Cut hand-hole,	Complied.
Charles Doyle,	Wood yard, etc.,	13	3	Put in fusible plug; cut hand-hole; feed with hot water,	Complied.
B. F. Cunningham,	Carpenter,	8	1	Repair gauge connections,	Complied.

Digitized by Google

Boiler Inspection Report — Continued.

NAME.	Building Used for —	Defects Found.		Orders Given.	Compliances.
		Total.	Dangerous.		
Taunton — Con.					
Lincoln & Wood Co.,	Machine shop,	15	7	Repair leaky safety valve, gauge glass, hand-holes and seams; put on gauge cocks; fusible plug.	Complied.
J. B. Sullivan,	Marble works,	9	-	None,	-
County of Bristol,	Court house,	18	2	Two boilers: put new tubes in both boilers,	Complied.
Morton Bros.,	Laundry,	14	7	Repair gauge glass and try cocks; put in new tubes,	Complied.
County of Bristol,	Prison,	28	4	Two boilers: put in new fire door frames,	Complied.
Patrick Coyle,	Bakery,	17	2	Put in new tubes; fusible plug,	Complied.
A. W. Pierce,	Cider works,	7	-	None,	-
William H. Gaffney,	Ice house,	8	8	Put in fusible plug; hand-hole; repair leaky patch,	Complied.
Charles H. Buffington,	Printing,	7	-	None,	-
Plymouth.					
P. & K. Street Railway Co.,	Hotel,	10	2	Put check in feed pipe and fusible plug,	Complied.
C. H. Snell,	Hotel,	7	-	None,	-
Charles D. Craig,	Hoisting,	9	2	Repair try cocks and steam gauge,	Complied.
James Millar & Co.,	Hoisting,	1	1	Put in fusible plug,	Complied.
Plymouth Mills,	Tack mills,	8	5	Repair safety valve, gauge glass and connecting pipes; put in fusible plug.	Complied.
Plymouth Mills,	Tack mills,	8	5	Repair safety valve, gauge glass, connecting nipples and inspirator valve; put in fusible plug.	Complied.
W. H. Gray,	Carpet cleaning,	7	-	None,	-

Digitized by Google

Berkley.					
L. P. Churchill,	Saw mill,	13	4	Repair setting; repair safety valve,	Complied.
J. E. Camp,	Saw mill,	8	3	Repair safety valve; put in fusible plug,	Out of use.
Wareham.					
James W. Hurley,	Hoisting,	12	5	Repair try cocks, hand-holes and feed pipe; clean out leg and test at one hundred and twenty-five pounds pressure.	Complied.
Mrs. James B. Clark,	Hotel,	12	1	Put stop valve in feed pipe,	Complied.
George P. Morse,	Saw mill,	11	2	Repair safety valve and put blow-off pipe in bottom,	Complied.
James B. Hamlin,	Saw mill,	17	8	Put in new tubes; test to one hundred and twenty-five pounds pressure.	Out of use.
Nelson Huckins, Jr.,	Boat shop,	12	8	Put in fusible plug, hand-hole, new tubes and stop valve in feed pipe; repair try cocks.	Out of use.
Bridgewater.					
Z. Bernier,	Brick yard,	6	1	Put stop valve in feed pipe,	Out of use.
State Farm,	Prison,	19	1	Two boilers: repair setting,	Complied.
State Farm,	Repair shop,	41	4	Five boilers: put in new tubes and hand-hole yokes,	Complied.
State Farm,	Pumping,	18	2	Two boilers: put in fusible plug; repair check valve,	Complied.
State Farm,	Pumping,	10	-	None,	-
State Farm,	Green house,	9	-	None,	-
Middleborough.					
Daniel O'Connell & Son,	Pile driving,	3	1	Put in fusible plug,	Complied.
Daniel O'Connell & Son,	Pumping,	4	1	Try cock handle,	Complied.
Daniel O'Connell & Son,	Pumping,	19	12	Condemned,	-

Digitized by Google

Boiler Inspection Report — Continued.

NAME.	Building Used for —	Defects Found.		Orders Given.	Compliances.
		Total.	Dangerous.		
Middleborough — Con.					
Daniel O'Connell & Son,	Pumping,	13	5	Put in fusible plug; make blow-off feed connections and hand-holes tight.	Complied.
J. L Benson,	Saw mill,	16	6	Repair setting, safety valve and stop and check valves in feed pipe and apply pressure of one hundred and twenty-five pounds.	Complied.
A. W. Smith,	Saw mill,	12	2	Put in new stay bolts,	Complied.
George R. Sampson,	Brick yard,	12	1	Repair safety valve,	Complied.
Brett & Soule,	Corn mill,	12	3	Repair try cocks; put in fusible plug; change valves in feed pipe,	Complied.
Harrison W. Atwood,	Saw mill,	6	1	Repair safety valve,	Complied.
J. B. LeBaron,	Saw mill,	26	15	Repair gauge glass, setting, hand-hole and feed arrangements; put in new tubes.	Partly complied.
J. B. LeBaron,	Ice house,	6	1	Cut hand-hole,	Out of use.
Herman G. Schlueter,	Laundry,	16	7	Building burned soon after inspection and boiler out of use,	-
B. C. Shaw,	Saw mill,	10	1	Repair gauge glass,	Complied.
Norton.					
Robert H. White,	Ice house,	6	1	Cut hand-hole and apply one hundred and fifty pounds water pressure.	Complied.
Plympton.					
Walter F. Blanchard,	Try works,	7	2	Raise combination column,	Complied.
North Dartmouth.					
Arthur J. Delano,	Soap works,	10	3	Repair blow-off valve and try cocks; put in new tubes,	Complied.

Digitized by Google

Eddyville.					
Charles H. Soule,	Pumping, etc.,	7	-	None,	-
Washburn & Soule,	Saw mill,	12	2	Put in new tubes and feed pipe,	Complied.
Freetown.					
Blagen & Bush,	Pumping,	9	2	Put in fusible plug; put in hand-hole,	Complied.
Bates, Kirby & Co.,	Ice house,	7	1	Repair gauge glass,	Complied.
Chace Bros.,	Saw mill,	12	4	Repair column and leaky seams,	Complied.
Crystal Spring Bleaching & Dyeing Co.	Bleach works,	100	6	Six boilers: repair connecting valves and cracked plates; put in new tubes.	Complied.
Lakeville.					
R. W. Pratt,	Pumping,	19	12	Condemned,	-
J. F. Knowles,	Pumping,	12	3	Put on safety valve; fusible plug; stop valve in feed pipe,	Complied.
O. M. Farmer,	Basket works,	11	1	Stop leak in patch,	Complied.
Fairhaven.					
Narragansett Improvement Co.,	Road roller,	2	2	Two boilers: put in fusible plugs,	Complied.
Frank C. Smith,	Boat shop,	5	-	None,	-
George R. Valentine,	Machine shop,	12	2	Put in fusible plug and safety valve,	Complied.
Fairhaven Town Hall,	Post office and offices,	18	-	Two boilers,	-
Town of Fairhaven,	Stone crusher,	5	3	Repair leaky stay bolts,	Complied.
Town of Fairhaven,	Sewer pumping,	7	-	None,	-
Town of Fairhaven,	Road roller,	7	-	None,	-

Digitized by Google

Boiler Inspection Report — Continued.

NAME.	Building Used for —	Defects Found.		Orders Given.	Compliances.
		Total.	Dangerous.		
Hyannis.					
State Normal School,	Schoolhouse,	6	2	Two boilers: stop leaks; provide adequate water supply,	Complied.
Somerset.					
Mount Hope Iron Co.,	Nail mill,	15	1	Two boilers: make leaky seam tight,	Complied.
Mount Hope Iron Co.,	Rolling mill,	24	-	Four boilers,	-
Mount Hope Iron Co.,	Rolling mill,	12	-	Two boilers,	-
Mount Hope Iron Co.,	Rolling mill,	12	-	Two boilers,	-
Mount Hope Iron Co.,	Rolling mill,	13	-	Two boilers,	-
Mount Hope Iron Co.,	Rolling mill,	12	-	Two boilers,	-
Mount Hope Iron Co.,	Rolling mill,	12	-	Two boilers,	-
Mount Hope Iron Co.,	Rolling mill,	12	-	Two boilers,	-
Mount Hope Iron Co.,	Repair shop,	12	-	None,	-
Mount Hope Iron Co.,	Hoisting,	10	1	Make seam tight,	Complied.
Mount Hope Iron Co.,	Hoisting,	3	-	None,	-
Mount Hope Iron Co.,	Pumping,	8	-	None,	-
Mount Hope Iron Co.,	Nail mill,	21	-	Three boilers,	-

Digitized by Google

Halifax.					
Robert Dewhurst,	Saw mill,	11	-	None,	-
N. K. Angus,	Saw mill,	12	3	Repair gauge glass; put blow-off in bottom of shell,	Complied.
William M. Tillson,	Saw mill,	2	-	None,	-
East Bridgewater.					
Hosea Hathaway & Co.,	Saw mill,	6	-	None,	-
Joshua Dean,	Foundry,	15	-	None,	-
J. D. Jones,	Saw mill,	10	3	Put in new tubes; test to one hundred and twenty-five pounds pressure.	Complied.
Dighton.					
J. S. Place,	Corn mill,	12	5	Repair gauge glass and leaky rivets; cut hand-hole,	Complied.
Arnold Peck & Co.,	Color works,	10	2	Repair safety valve; remove scale,	Complied.
Century Stove Foundry,	Foundry,	20	8	Clean boiler; remove scale; repair setting; safety valve; blow-off valve; put in fusible plug and gauge glass.	Complied.
F. A. Whitmarsh,	Wood sawing,	8	3	Put in fusible plug; repair gauge glass; cut hand-hole,	Complied.
David P. Lincoln,	Canning,	9	2	Take measures to reduce scale,	Complied.
North Easton.					
Oliver Ames & Sons,	Shovel works,	10	3	Repair setting and safety valve; put on water gauge glass,	Complied.
Oliver Ames & Sons,	Shovel works,	10	3	Repair safety valve and gauge glass; put stop in feed pipe,	Out of use.
Oliver Ames & Sons,	Shovel works,	8	1	Repair setting,	Out of use.
Oliver Ames & Sons,	Shovel works,	10	1	Repair setting,	Complied.
Oliver Ames & Sons,	Shovel works,	16	7	Repair try cocks, setting and corroded seam; put blow-off pipe in bottom; clean out grease.	Complied.

Digitized by Google

Boiler Inspection Report — Concluded.

NAME.	Building Used for —	Defects Found.		Orders Given.	Compliances.
		Total.	Dangerous.		
Duxbury.					
L. Boyer's Sons,	Pumping,	18	-	None,	-
L. Boyer's Sons,	Pumping,	15	-	None,	-
Sandwich.					
Union Braiding Co.,	Braiding mill,	7	7	Put stop valves in steam and return pipes; check valves in feed and return pipes; drip valve in return pipe; fusible plug.	Complied.
Adamsdale.					
J. T. Adams,	Cotton mill,	28	6	Two boilers: repair safety valves, gauge glasses and try cocks,	Complied.
Marion.					
Taber Academy,	School,	14	3	Repair damper, setting, leaky sections and return pipe; put in drip and check valves; adopt system of blowing off.	Complied.
Taber Academy,	School,	7	5	Put in fusible plug; check valve and stop in damper regulator; repair gauge glass.	Complied.
Taber Academy,	Dormitory,	8	6	Put in fusible plug; check valves in feed and return pipes; stop valves in steam and return pipes.	Complied.

Digitized by Google

Report of Inspector Amell.

District No. 3.

Sir: — I have the honor to submit my third annual report of the work performed for the year ending Oct. 20, 1898.

But one accident has occurred, resulting fatally or injuring any one during the time covered by this report, to boilers in this district. The cause and results of this accident were fully submitted to you in a special report at the time of its occurrence.

All orders issued for the repair of boilers or changes of the appliances about them have been complied with cheerfully by the owners or users, and where the boilers have been reported as unfit for further use new boilers have been provided.

The special duty entrusted to me of investigating the boiler explosion at Griswoldville, Mass., District No. 4, last December, has been fulfilled by a special detailed report to you setting forth the conditions attending the accident.

The value of the boiler inspection law is being acknowledged more and more as steam users become better acquainted with the methods under which our inspections are conducted. Many owners have been surprised to find that their boilers were not supplied with the proper fittings for safety, and that life and property were jeopardized for the lack of them. In one town in my district where the heating plants were fitted up by a local steam fitter, eight plants were found with no stop valves in the steam pipes, or check valves or stop valves in the return water pipe. This lack of necessary fittings was promptly supplied.

The value of boiler inspection is being attested to by the marked improvement in the condition of the boilers that have been inspected the second time. A general disposition to remove all defects before the inspection takes place is manifested by the owners and users of steam plants, and improved conditions are the results, and there will be fewer accidents in the future.

Regarding the examination of engineers and firemen, nothing has developed during the year which requires special mention in this report. In general, it may be said that the law is respected and complied with as well as any law affecting so many people. But few complaints have been received of late, and no gross violations have been found.

The applicants for licenses are examined nearly as soon as application is made, and but a small number of applicants remain to be examined at this time. The renewing of the expiring licenses has nearly doubled the work of the office, and the clerical work

Digitized by Google

requires much time which should be devoted to inspections or examinations. The correspondence of the office is also much increased by the expiring licenses, and requires prompt attention. All this must be attended to and must of a necessity reduce the work outside.

The following is a summary of boiler inspections and engineer examinations: —

Summary of Inspections.

Boilers inspected,	320
Defects found,	464
Dangerous defects,	204
Boilers ordered repaired,	119
Boilers condemned,	9

Summary of Examinations.

Applicants for licenses examined,		699
Licenses granted: —		
First class,	11	
Second class,	48	
Third class,	44	
Special licenses,	304	
Firemen,	66	
Hoisting and portable,	41	
Steam fire engines,	12	
	526	
Licenses refused,	173	
	699	
Expired licenses renewed,		183

Digitized by Google

Boiler Inspection Report.

DISTRICT No. 3.

NAME.	Building Used for —	Defects Found.		Orders Given.	Compliances.
		Total.	Dangerous.		
South Ashburnham.					
W. F. Whitney,	Boiler house,	2	-	None,	-
W. F. Whitney,	Boiler house,	3	1	Repair walls,	Complied.
W. F. Whitney,	Boiler house,	-	-	None,	-
Fitchburg R.R. Co.,	Pumping station,	5	3	New boiler ordered,	Complied.
Fitchburg R.R. Co.,	Pumping station,	-	-	None,	-
Town of South Ashburnham,	Steam fire engine,	1	1	New fusible plug,	Complied.
John F. Withington,	Blacksmith shop,	1	1	Steam gauge repaired,	Complied.
John M. Pratt,	Shop,	2	1	Put in fusible plug,	Complied.
William B. Pierce,	Chair shop,	1	-	None,	-
Athol.					
Charles M. Lee's Sons,	Boiler house,	-	-	None,	-
Charles M. Lee's Sons,	Boiler house,	2	2	Remove scale,	Complied.
Jerry Rivers,	Wood yard,	-	-	None,	-
Brookfield.					
Geo. H. Dean,	Hotel,	4	1	Put in fusible plug,	Complied.
Thomas F. Murphy,	Hotel,	1	1	Put in fusible plug,	Complied.

Digitized by Google

Boiler Inspection Report — Continued.

NAME.	Building Used for—	Defects Found.		Orders Given.	Compliances.
		Total.	Dangerous.		
West Brookfield.					
Olmstead Quaboag Corset Co.,	Manufacturing purposes,	1	1	Renew fusible plug,	Complied.
Town of West Brookfield,	School house,	2	2	Put in fusible plug,	Complied.
Congregational Society,	Church,	1	-	None,	-
Boston & Albany R.R. Co.,	Pumping station,	4	2	Put in new plug and clean boiler,	Complied.
East Brookfield.					
Boston & Albany R.R. Co.,	Pumping station,	1	-	None,	-
Charlton.					
Boston & Albany R.R. Co.,	Pumping station,	4	1	Put on larger safety valve,	Complied.
Clinton.					
Trustan D. Dexter,	Skating rink,	1	-	None,	-
Robert McRell,	Wood yard,	1	1	Cut hand-hole for cleaning,	Complied.
W. B. Killingbeck,	Wood yard,	1	-	None,	-
Martin Murphy,	Stone crusher,	2	2	Repair steam gauge; put on larger safety valves,	Complied.
Martin Murphy,	Stone crusher,	-	-	None,	-
E. C. Swift,	Manufacturing,	1	-	None,	-
Philbin Bro.,	Wood yard,	4	1	Repair gauge cocks,	Complied.

Digitized by Google

Charles F. Martin,	Machine shop,	2	1	Repair steam gauge,	-
W. I. Coulter,	Printing,	2	-	None,	-
Henry McGrath,	Hotel,	4	3	Renew tubes; new fusible plugs; new return pipe,	New boiler.
Dudley.					
Louis E. Pattison,	Wood yard,	2	-	None,	-
Fitchburg.					
Fitchburg R.R. Co.,	Machine shop,	3	3	New head patch; clean out,	New boiler.
Fitchburg R.R. Co.,	Sand shed,	3	2	Raise water column; repair tubes,	Complied.
Fitchburg R.R. Co.,	Rail shop,	3	2	Cut hand-hole; new steam gauge,	Complied.
Fitchburg R.R. Co.,	Car shop,	3	-	None,	-
Fitchburg R.R. Co.,	Car shop,	3	-	None,	-
Fitchburg R.R. Co.,	Car shop,	3	-	None,	-
Fitchburg R.R. Co.,	Hoisting,	4	1	Renew fusible plug,	Complied.
Fitchburg R R. Co.,	Hoisting,	6	3	New safety plug; new steam gauge; larger safety valve,	Complied.
A. A. Coburn,	Steamboat,	1	-	None,	-
John L. Culver,	Merry-go-round,	-	-	None,	-
Fitchburg R.R. Co.,	Pumping,	1	1	Change steam gauge,	Complied.
Worcester County Jail,	Jail,	2	2	Repair steam gauge; new fusible plug,	Complied.
Worcester County Jail,	Jail,	3	2	Repair steam gauge; patch; new blow-off,	Complied.
State Normal School,	School,	-	-	None,	-
State Normal School,	School,	-	-	None,	-

Digitized by Google

Boiler Inspection Report — Continued.

NAME.	Building Used for —	Defects Found.		Orders Given.	Compliances.
		Total.	Dangerous.		
Gardner.					
Fitchburg R.R. Co.,	Express and baggage,	-	-	None,	-
Fitchburg R.R. Co.,	Passenger station,	-	-	None,	-
Alex. Robichaud,	Wood yard,	1	1	Condemned,	-
John Leaney,	Wood yard,	-	-	None,	-
Osgood & Coolidge,	Merry-go-round,	4	3	New tubes; larger safety valve; new head,	New boiler.
Osgood & Coolidge,	Steamboat,	3	1	New tubes,	New boiler.
Fitchburg R.R. Co.,	Passenger station,	-	-	None,	-
Hubbardston.					
Adjustable Low Table Co.,	Out doors,	-	-	None,	-
Howe's Mill Lumber Co ,	Manufacturing purposes,	3	2	Renew blow-off pipe; fix brace; renew safety plug,	Complied.
Howe's Mill Lumber Co ,	Manufacturing purposes,	3	2	Renew safety plug,	-
Hardwick.					
Saxton & Doyle,	Portable,	4	2	Repair try cocks; change fusible plug,	Complied.
Henry M. Hill,	Merry-go-round,	4	2	Put in large safety valve; put in new safety plug and blow-off pipe.	Complied.
Holden.					
Town of Holden,	School,	3	1	Renew pitted tubes,	Complied.

Digitized by Google

Leominster.					
Bay State Comb Co.,	Manufacturing,	3	3	Put in new fusible plug; cut hand-hole; check valve,	New boiler.
Albert R. Carter,	Laundry,	-	-	None,	-
Hannah A. Goodhue,	Manufacturing,	-	-	None,	-
Henry A. Cutting,	Laundry,	1	1	Change feed pipe,	Complied.
Thomas J. Quinn,	Manufacturing,	-	-	None,	-
Farrer, Lawrence & Stone,	Ice house,	-	-	None,	-
Bay State Comb Co.,	Manufacturing,	-	-	None,	-
South Lancaster.					
W. A. Willcox,	Advent school,	1	1	None,	-
W. A. Willcox,	Advent school,	1	1	None,	-
John D. McNamara,	Shop,	1	-	None,	-
Adolphe Massa,	Blacksmith shop,	2	-	None,	-
Millbury.					
Wilton G. Farnsworth,	Manufacturing,	4	2	Reduce pressure to thirty pounds,	New boiler.
Wilton G. Farnsworth,	Manufacturing,	-	-	None,	-
Borrow's Estate,	Stores and offices,	1	-	None,	-
Henry T. Merriam,	Shop,	1	1	Put in new fusible plug,	Complied.
Malt Bros.,	Dye house,	2	-	None,	-
Malt Bros.,	Dye house,	2	-	None,	-

Digitized by Google

Boiler Inspection Report — Continued.

NAME.	Building Used for —	Defects Found.		Orders Given.	Compliances.
		Total.	Dangerous.		
Princeton.					
J. E. Bigelow,	Grain mill,	2	2	Not fit for further use,	-
Fitchburg R.R. Co.,	Pumping station,	-	-	None,	-
Irving E. Gray,	Boiler house,	3	3	Repair steam gauge; change feed pipe; reset water column,	Complied.
East Princeton.					
John H. Temple,	Chair shop,	1	-	None,	-
Rutland.					
Frederick S. Hunt,	Portable,	2	-	None,	-
Royalston.					
Fitchburg R.R. Co.,	Pumping station,	2	1	Clean boiler,	Complied.
Rochdale.					
Chaffee Brothers,	Portable,	1	1	Repair head,	Complied.
Southbridge.					
William M. Blanchard,	Optical work,	1	1	Renew safety plug,	Complied.
Arthur W. Razee,	Laundry,	-	-	None,	-
James R. Brown,	Laundry,	-	-	None,	-

Digitized by Google

Sutton.					
B. B. & R. Knight,	No. 1 cotton mill,	-	-	None,	-
B. B. & R. Knight,	No. 1 cotton mill,	1	-	None,	-
B. B. & R. Knight,	No. 1 cotton mill,	1	-	None,	-
B. B. & R. Knight,	No. 2 cotton mill,	4	2	Repair walls; new safety plug,	Complied.
B. B. & R. Knight,	No. 2 cotton mill,	3	1	Change fusible plug,	Complied.
B. B. & R. Knight,	No. 2 cotton mill,	1	1	Change fusible plug,	Complied.
B. B. & R. Knight,	No. 3 cotton mill,	1	-	None,	-
B. B. & R. Knight,	No. 3 cotton mill,	1	-	None,	-
B. B. & R. Knight,	No. 3 cotton mill,	1	-	None,	-
B. B. & R. Knight,	No. 3 cotton mill,	1	-	None,	-
Sterling.					
Charles H. Palmer,	Manufacturing,	2	1	Repair brick work,	Complied.
T. & E. R. Buck,	Manufacturing,	-	-	None,	-
S. E. Harthon,	Steamboat,	1	-	None,	-
Templeton.					
Fitchburg R.R. Co.,	Pumping station,	2	2	Repair steam cock and steam gauge,	Complied.
George W. Travers,	Workshop,	-	-	None,	-
Uxbridge.					
Eugene S. Farnham,	Wood yard,	1	1	None,	-

Digitized by Google

Boiler Inspection Report — Continued.

NAME.	Building Used for —	Defects Found. Total.	Defects Found. Dangerous.	Orders Given.	Compliances.
Uxbridge — Con.					
Leander S. Aldrich,	Wood shop,	2	2	Larger fusible plug; cut hand-holes,	Complied.
B. L. Dresser & Co.,	Blacksmith shop,	1	-	None,	-
Webster.					
Edward S. Emerson,	Steamboat,	-	-	None,	-
Edward S. Emerson,	Shop,	1	-	None,	-
Edgar S. Hill,	Steamboat,	1	1	Put in fusible plug,	Complied.
W. E. Phetteplace,	Steamboat,	-	-	None,	-
Boston & Albany R.R. Co.,	Pumping station,	2	1	Renew tubes; repair steam gauge,	Complied.
Fred R. Child,	Bakery,	5	2	Renew fusible plug; repair walls,	Complied.
German Society,	Hall,	1	1	Put in pet-cock under water column; change fusible plug,	Complied.
Louis E. Pattison,	Wood yard,	2	-	None,	-
F. J. Sinclair,	Hotel,	2	2	Put in check valves; put in stop valves,	Complied.
Town of Webster,	Fire steamer,	1	-	None,	-
H. N. Slater,	Cotton mill,	2	-	None,	-
H. N. Slater,	Cotton mill,	1	1	New safety plug,	Complied.
H. N. Slater,	Cotton mill,	4	3	Boiler not fit for further use,	-
H. N. Slater,	Cotton mill,	-	-	None,	-

Digitized by Google

H. N. Slater,	Cotton mill,	1	-	None,	-
H. N. Slater,	Cotton mill,	2	1	Reduce pressure to thirty pounds,	Complied.
H. N. Slater,	Cotton mill,	2	1	Reduce pressure to thirty pounds,	Complied.
H. N. Slater,	Cotton mill,	5	3	Clean boiler; change feed; new blow-off,	Complied.
H. N. Slater,	Cotton mill,	6	3	Clean boiler; patch; renew blow-off,	Complied.
H. N. Slater,	Cotton mill,	7	3	Clean boiler; change feed and blow-off,	Complied.
H. N. Slater,	Cotton mill,	1	1	Put in water heater; clean boiler,	Complied.
H. N. Slater,	Cotton mill,	3	1	Put in heater; clean boiler,	Complied.
H. N. Slater,	Woollen mill,	-	-	None,	-
H. N. Slater,	Woollen mill,	-	-	None,	-
H. N. Slater,	Woollen mill,	1	-	None,	-
H. N. Slater,	Woollen mill,	-	-	None,	-
H. N. Slater,	Woollen mill,	-	-	None,	-
H. N. Slater,	Woollen mill,	5	1	Patch boiler,	Complied.
H. N. Slater,	Woollen mill,	5	1	Clean boiler,	Complied.
H. N. Slater,	Woollen mill,	3	1	Clean boiler; fix walls,	Complied.
H. N. Slater,	Woollen mill,	3	1	Clean boiler; fix walls,	Complied.
H. N. Slater,	Store,	1	-	None,	-
H. N. Slater,	Cotton mill, North Village,	2	-	None,	-
H. N. Slater,	Cotton mill, North Village,	2	-	None,	-
H. N. Slater,	Wood yard,	1	1	Put in pet-cock, bottom column,	Complied.

Digitized by Google

Boiler Inspection Report — Continued.

NAME.	Building Used for —	Defects Found.		Orders Given.	Compliances.
		Total.	Dangerous.		
Westborough.					
William H. Bradley,	Work shop,	-	-	None,	-
Town of Westborough,	School,	-	-	None,	-
Westborough Insane Hospital,	Barrel shop,	-	-	None,	-
Westborough Insane Hospital,	Hospital employees,	-	-	None,	-
Westborough Insane Hospital,	Patients,	-	-	None,	-
Westborough Insane Hospital,	Pumping station,	1	-	None,	-
Westborough Insane Hospital,	Boiler house,	1	-	None,	-
Westborough Insane Hospital,	Boiler house,	-	-	None,	-
Westborough Insane Hospital,	Boiler house,	-	-	None,	-
Westborough Insane Hospital,	Boiler house,	-	-	None,	-
Westborough Insane Hospital,	Boiler house,	-	-	None,	-
Westborough Insane Hospital,	Patients,	1	1	Put in new tubes,	Complied.
Westborough Insane Hospital,	Power house,	1	-	None,	-
Westborough Insane Hospital,	Power house,	-	-	None,	-
Westborough Insane Hospital,	Power house,	-	-	None,	-
Boston & Albany R.R. Co.,	Pumping,	4	2	Renew tubes; new fusible plug,	Complied.
H. W. Kimball,	Wood shed,	2	-	None,	-

Digitized by Google

I. D. McGann,	Church,	1	-	None,	-
H. O. Bernard,	Manufacturing,	2	-	None,	-
Westborough Insane Hospital,	Boiler house,	-	-	None,	-
Westborough Insane Hospital,	Boiler house,	-	-	None,	-
Westborough Insane Hospital,	Boiler house,	3	1	Put in new tubes,	Complied.
Westborough Insane Hospital,	Boiler house,	-	-	None,	-
Westborough Insane Hospital,	Boiler house,	3	1	Remove scale,	Complied.
A. N. Davenport,	Store and office,	1	-	None,	-
Warren.					
Town of Warren,	School house,	4	-	None,	-
Town of Warren,	School house,	3	-	None,	-
E. M. Switzer,	Saw mill,	3	3	Boiler unfit for further use,	-
W. B. Ramsdell,	Hotel,	1	1	Change position safety valve,	Complied.
Bradford Yarn Mills,	Manufacturing,	1	1	Repair steam gauge,	Complied.
Town of Warren,	School house,	-	-	None,	-
Town of Warren,	School house,	2	-	None,	-
W. B. Ramsdell,	Hotel,	-	-	None,	-
Bradford Yarn Mills,	Manufacturing,	-	-	None,	-
E. M. Switzer,	Saw mill,	1	-	None,	-
Westminster.					
Artemas Merriam,	No building,	-	-	None,	-
Artemas Merriam,	No building,	-	-	None,	-

Digitized by Google

Boiler Inspection Report — Continued.

NAME.	Building Used for —	Defects Found. Total.	Defects Found. Dangerous.	Orders Given.	Compliances.
Winchendon.					
H. B. Lord,	Hotel,	2	1	Put in check valve,	Complied.
Church of Unity Society,	Church,	1	-	None,	-
Town of Winchendon,	Steam fire engine,	-	-	None,	-
Town of Winchendon,	Steam fire engine,	-	-	None,	-
Town of Winchendon,	Poor house,	2	1	Change water column,	Complied.
Geo. F. Brown,	Carriage shop,	3	1	Put in fusible plug,	Complied.
C. C. Carter,	Shop,	2	-	None,	-
Charles L. Carter,	Shop,	1	-	None,	-
Fitchburg R R. Co.,	Pumping station,	3	-	None,	-
Boston & Albany R.R. Co.,	Pumping station,	1	-	None,	-
Worcester.					
J. C. French,	Manufacturing purposes,	6	2	Renew feed pipe; renew fusible plug,	Complied.
Fitchburg R.R. Co.,	Road repairs,	-	-	None,	-
F. A. Lapham,	Woollen mill,	1	-	None,	-
F. A. Lapham,	Woolen mill,	1	-	None,	-
Hopeville Manufacturing Co.,	Woolen mill,	1	-	None,	-
Hopeville Manufacturing Co.,	Woolen mill,	1	-	None,	-

Digitized by Google

Hopeville Manufacturing Co.,	Woollen mill,	-	-	None,	-
Charles A. Bartlett,	Rendering,	-	-	None,	-
Thomas H. Dodge,	Offices,	-	-	None,	-
Solomon Kuntz,	Shop,	-	-	None,	-
Julia M. Utley,	Tenements,	-	-	None,	-
J. J. Warren Co.,	Manufacturing,	1	-	None,	-
J. J. Warren Co.,	Manufacturing,	2	2	Put in new boiler,	Complied.
F. E. & W. E. Marshall,	Restaurant,	1	1	Put on new steam gauge,	Complied.
W. B. Richardson,	Shop,	4	2	Put blow off at back,	Complied.
C. B. Gates,	Wood yard,	3	1	New fusible plug; repair tubes,	Complied.
Calvin Bond,	Wood yard,	-	-	None,	-
M. M. Whitman & Co.,	Wood work,	1	-	None,	-
Robert Welsh,	Church,	1	-	None,	-
C. L. & M. E. Gorham,	Stores,	-	-	None,	-
C. E. Fobes,	Hotel,	1	1	Change weight on safety valve,	Complied.
Antiquarian Society,	Library,	1	-	None,	-
H. J. Adams,	Ice cream,	1	1	Repair steam gauge,	-
R. C. Taylor,	Opera house,	2	2	Put check in returns; repair steam gauge valve on water column,	Complied.
H. L. Fenton,	Bakery,	1	1	Put in fusible plug,	Complied.
O. C. Hadland,	Church,	1	-	None,	-
Chesley Burns,	Laundry,	-	-	None,	-
Trinity M. E Church,	Church,	2	1	Renew the tubes,	Complied.

Digitized by Google

Boiler Inspection Report — Continued.

NAME.	Building Used for—	Defects Found.		Orders Given.	Compliances.
		Total.	Dangerous.		
Worcester—Con.					
Rollo N. Start,	Hotel,	6	6	Check valve; three patches; new tubes,	New boiler.
Rollo N. Start,	Hotel,	-	-	None,	-
James A. Cane,	Wood yard,	3	1	Cut pressure to forty pounds,	Complied.
J. H. Pickford,	Hoisting,	2	1	Repair steam gauge,	Complied.
John P. Hill,	Manufacturing,	4	1	New fusible plug,	Complied.
Odd Fellows Hall,	Home,	3	2	Lock safety valve; new tubes,	Complied.
Odd Fellows Hall,	Home,	3	2	Lock safety valve; new tubes,	Complied.
Samuel Potter,	Manufacturing,	1	-	None,	-
Samuel Potter,	Manufacturing,	2	1	Repair braces,	Complied.
John H. Cheny,	Store,	2	2	New steam gauge; cut hand-holes,	Complied.
Boston & Albany R.R. Co.,	Passenger station,	4	3	New fusible plug; raise water column,	Complied.
Boston & Albany R.R. Co.,	Passenger station,	4	3	New fusible plug; new steam gauge; raise water column,	Complied.
Boston & Albany R.R. Co.,	Shop and office,	3	-	None,	-
Boston & Albany R.R. Co.,	Passenger station,	3	1	New fusible plug,	Complied.
Peter A. Friberg,	Wood yard,	1	1	Put in larger fusible plug,	Complied.
C. F. Stevens,	Manufacturing,	-	-	None,	-
John M. Feshjian,	Wood yard,	1	1	Cut hand-holes,	Complied.

Digitized by Google

Stearns & Harris,	Manufacturing,	-	-	None,	-
Goodnow Steamboat Co.,	Steamboat,	-	-	New steam gauge,	Complied.
Goodnow Steamboat Co.,	Steamboat,	1	1	None,	-
Goodnow Steamboat Co.,	Steamboat,	2	-	None,	-
Quinsigamond Steamboat Co.,	Steamboat,	1	-	None,	-
Quinsigamond Steamboat Co.,	Steamboat,	1	-	None,	-
Quinsigamond Steamboat Co.,	Steamboat,	1	-	None,	-
W. B. Richardson,	Shop,	4	2	Change blow-off pipe,	Complied.
A. Burlingame,	Shop,	2	1	New fusible plug; new stay bolts,	Complied.
Andrew H. Scholfield,	Shop,	-	-	None,	-
David Gessner,	Machine shop,	-	-	None,	-
Charles G. Reed,	Store,	1	-	None,	-
John N. Grout,	Store,	-	-	None,	-
Stevens' heirs,	Store and shop,	2	-	None,	-
Geo. S. Hatch,	Manufacturing,	2	-	None,	-
Geo. S. Hatch,	Manufacturing,	3	1	None,	-
Universalist Church,	Church,	3	3	Boiler not fit for further use,	New boiler.
Geo. D. Moore,	Tenements,	1	1	Put in wood plugs,	Complied.
E. M. McClellan,	Tenements,	2	2	Put in stop, steam and check valves,	-
Orin S. Hopkins,	Carpet cleaning,	-	-	None,	-
People's Savings Bank,	Bank,	1	-	None,	-
A. B. David Sons,	Foundry,	5	1	Boiler unfit for further use,	New boiler.

Digitized by Google

Boiler Inspection Report — Concluded.

NAME.	Building Used for —	Defects Found.		Orders Given.	Compliances.
		Total.	Dangerous.		
Worcester — Con.					
E. S. Buck,	Tenements,	-	-	None,	-
Clark University,	School,	2	-	None,	-
Clark University,	School,	2	-	None,	-
Clark University,	School,	2	1	Cut pressure to fifty pounds,	Complied.
H. H. Houghton,	Tenements,	2	1	Repair steam gauge,	Complied.
H. H. Houghton,	Store,	1	-	None,	-
Whitcomb Mfg. Co.,	Shop,	1	1	Repair steam gauge,	-
Reed & Curtis,	Shop,	1	-	None,	-
J. E. Wesson,	Shoe shop,	-	-	None,	-
James H. Whittle,	Shop,	1	-	None,	-
State Normal School,	School,	2	-	None,	-
State Normal School,	School,	2	-	None,	-
Estate Wm. T. Merrifield,	Shop,	2	-	None,	-
Estate Wm. T. Merrifield,	Shop,	2	-	None,	-
Estate Wm. T. Merrifield,	Shop,	2	-	None,	-
Estate Wm. T. Merrifield,	Shop,	1	-	None,	-
Worcester County Jail,	Jail,	1	-	None,	-

Digitized by Google

Worcester County Jail,	Jail,	1	-	None,	-
Worcester County Jail,	Jail,	-	-	None,	-
Worcester County Court House,	Court house,	3	2	New blow-off; new feed pipe; repair hand-hole and fire-box,	Complied.
Stephen Salisbury,	Tenements,	2	2	New tubes; new blow-off,	Complied.
Stephen Salisbury,	Tenements,	2	1	New blow-off,	Complied.
R. C. Taylor,	Store and offices,	3	2	New tubes and fusible plug,	Complied.
R. C. Taylor,	Store and offices,	3	2	New tubes and fusible plug,	Complied.
Eben Harrington,	Store,	3	1	Put check in water pipe; enlarge water pipe,	Complied.
Rebecca Barnard,	Tenements,	2	1	Put in check valve; enlarge water pipe,	Complied.
C. E. Fobes,	Hotel,	3	2	Enlarge feed pipe; renew blow-off pipe,	Complied.
Garland, Lincoln & Co.,	Grain mill,	1	-	None,	-
Mr. S. R. Leland,	Hotel,	3	1	Put check on water pipe; enlarge water pipe,	Complied.
Gilman Carriage Shop,	Shop,	2	1	New fusible plug,	Complied.
Robert Welsh,	Church,	2	2	Put new safety plug,	Complied.
Pilgrim Church,	Church,	4	3	Smaller weight on safety valve; new tubes; new safety plug,	-
Pilgrim Church,	Church,	4	3	Smaller weight on safety valve; new tubes; new plug; change pipe.	-
J. M. Rice,	Tenements,	-	-	None,	-
Stephen Saulisbury,	Shops,	3	2	Change fusible plug,	Complied.
Stephen Saulisbury,	Shops,	2	1	Change fusible plug,	Complied.
Stephen Saulisbury,	Shops,	3	2	Change fusible plug; new pump and injector,	Complied.
J. J. Warren,	Shop and stores,	-	-	None,	-
J. J. Warren,	Shop and stores,	-	-	None,	-

Digitized by Google

Report of Inspector Sanborn.

District No. 4.

Sir: — I have the honor to submit my first annual report of the work accomplished from the time of my appointment, February 15, to October 30.

On taking charge of this district I found over 500 applications for license on file, some of these having been received in 1895, and 340 have been received since, and they are at present coming in at the rate of 30 or 40 per month. There have been 441 applicants for license examined, 456 licenses granted, including reissues, and 32 refused. After a second notification, 225 applications have been cancelled. The reissue of licenses began the first of August, and since then 25 have been issued without examination. The remaining details will be found in the tabulated report. I am glad to say that a great majority of the men examined have shown a good practical knowledge of their subject, so that comparatively few have been refused licenses.

The work has progressed now so that applicants need to wait but a short time for examination, and some have been examined from nearly every town in the district.

Since the first of June a greater part of the time has been devoted to the inspection of boilers. One hundred and forty have been inspected, 3 have been condemned, and 28 ordered repaired. The previous inspector in this district had inspected nearly every boiler at least once, and many twice or three times. He found many defects, and as his orders were complied with, the boilers are now in very good condition. This accounts for the small number of orders given this year. Many boilers have been put in recently, and these have been inspected for the first time.

With almost no exception, the owners have been found heartily in favor of the laws for the inspection of boilers, and have cheerfully complied with all orders issued. Many seem to be in ignorance of the law that compels the annual report of the number and location of boilers by owners or users. This ignorance, or non-compliance with the law, increases the work of the inspector, it being particularly difficult to locate the portable boilers that move about from one town to another.

The principal defects found by inspection are: lack of fusible plugs, burnt dry sheets and external corrosion; but, as remarked before, most of the boilers are in good condition. Three boilers in the United States armory, Springfield, were inspected at the request of the commandant, although a State inspector has no authority over them. As an illustration of external corrosion, I

Digitized by Google

found a locomotive boiler, type fire-box, about 15 feet in length, that had a cast-iron rest under it, placed just under the middle girt seam; there was some indication of a leak around the rest, and on its removal it was found that the boiler had corroded between the boiler plate and rest to such an extent that a hole three by seven inches could be made in the plate with an eight-ounce hammer. On another boiler of the same type the front tube sheet was found to be so badly corroded across the bottom that when the scale and corrosion were scraped away the water ran out before it was struck with the hammer, and with a light hammer the tube sheet for a distance of eight or nine inches could be broken away next to the rivets. This was a wood-burning boiler, and the ashes were allowed to accumulate in the smoke-box. This boiler for a number of years had been used only a part of the time, standing idle for several months at a time, giving the wood ashes a chance to collect moisture and eat out the plate. It is a well-known fact that wood ashes, if allowed to remain in contact with any part of a boiler when idle, are very much more destructive to the metal than coal ashes. A greater part of the boilers in my district are wood-burning boilers, and cases of corrosion from this cause are very common on tube sheets and furnaces. Following will be found a summary of the examinations and inspections: —

Summary of Examinations.

Applicants for license examined,	441
Licenses granted: —	
First class,	22
Second class,	25
Third class,	34
Special,	193
Hoisting and portable,	29
Firemen,	106
On employers' certificate,	22
Second issue,	25
Total licenses,	456
Licenses refused,	32
Applications cancelled,	225
New applications received,	340

Summary of Inspections.

Boilers inspected,	140
Number of defects found,	77
Number of dangerous defects,	53
Number of boilers ordered repaired,	28
Number of boilers condemned,	3

Digitized by Google

Boiler Inspection Report.

DISTRICT No. 4.

NAME.	Building Used for —	Defects Found. Total.	Defects Found. Dangerous.	Orders Given.	Compliances.
Amherst.					
L. E. Dickinson,	No building,	-	-	None,	-
Town of Amherst,	Town hall,	-	-	None,	-
Town of Amherst,	Town hall,	-	-	None,	-
George F. Mills,	Agricultural college,	2	1	Protect the dry plate; provide siphon for pressure gauge,	-
George F. Mills,	Agricultural college,	2	1	Protect the dry plate; provide siphon for pressure gauge,	-
George F. Mills,	Agricultural college,	1	1	Lighten ball on safety valve,	-
George F. Mills,	Agricultural college,	1	1	Lighten ball on safety valve,	-
George F. Mills,	Agricultural college,	-	-	None,	-
D. H. Kendrick,	Hotel,	-	-	None,	-
Becket.					
Becket Silk Co.,	Silk manufacturing,	1	1	Protect the dry plate,	Complied.
Belchertown.					
W. H. Capen,	Saw mill,	-	-	None,	-
A. S. Pratt,	Saw mill,	-	-	None,	-
E. S. Lane,	Cider mill,	-	-	None,	-

Digitized by Google

Blandford.					
Loomis E. Farnum,	Saw mill,	3	2	Put in fusible plug and try cocks; remove partitions,	-
Cheshire.					
Berkshire Glass Sand Co.,	Glass sand manufacturing,	-	-	None,	-
Chester.					
Oscar H. Smith,	Wood turning,	-	-	None,	-
Boston & Albany R.R.,	Pumping station,	-	-	None,	-
Byron E. Pease,	Saw and cider mills,	1	1	Put patch on middle sheet,	Complied.
Chicopee.					
R. W. Bemis,	Ice house,	-	-	None,	-
Alexander A. M. Moore,	Hotel,	-	-	None,	-
R. E. Duggan,	Hotel,	-	-	None,	-
Luther White,	Stores,	-	-	None,	-
W. C. Wedge,	Bakery,	-	-	None,	-
C. C. Abbey,	Sawing wood,	3	3	Condemned,	-
John F. Nagle,	Hotel,	-	-	None,	-
Chicopee Falls.					
Down & Bagley,	Laundry,	-	-	None,	-
East Lee.					
Emerson A. Houston,	Saw mill,	3	2	Put in fusible plug, siphon pipe and blow-off pipe,	Complied.

Digitized by Google

Boiler Inspection Report — Continued.

NAME.	Building Used for —	Defects Found.		Orders Given.	Compliances.
		Total.	Dangerous.		
East Longmeadow.					
Norcross Bros.,	Quarry,	-	-	None,	-
Heath Bros.,	Cider mill,	2	1	Cut hand-hole; clean out mud,	-
Enfield.					
Swift River Co.,	Woollen mill,	-	-	None,	-
Swift River Co.,	Woollen mill,	-	-	None,	-
Woods & Ward,	Saw mill,	-	-	None,	-
E. B. Downing,	Saw mill,	-	-	Reduce pressure,	-
Goshen.					
H. C. Packard,	Saw mill,	1	1	Put in fusible plug,	Complied.
Granby.					
W. H. Capen,	No building,	1	1	New set of tubes,	-
Great Barrington.					
Robert S. Dobbs,	Laundry,	3	3	Put in steam gauge; three try cocks; fusible plug,	Complied.

Digitized by Google

Greenwich.					
O. A. Fay,	Saw mill,	-	-	None,	-
Webster Bros.,	Saw mill,	-	-	None,	-
E. P. Mitchell,	Saw mill,	-	-	None,	-
Griswoldville.					
Griswold Bros.,	Cotton mill,	-	-	None,	-
Griswold Bros.,	Cotton mill,	-	-	None,	-
Hadley.					
H. P. Barker,	Cider mill,	4	1	Reduce pressure; cut-off blisters; reinforce hand-hole; repair setting.	Complied.
Hatfield.					
Ward & Douglass,	No building,	-	-	None,	-
Ward & Douglass,	No building,	-	-	None,	-
Ward & Douglass,	No building,	-	-	None,	-
Haydenville.					
Haydenville Pearl Button Co.,	Buttons,	1	1	Reduce pressure; lighten ball on safety valve,	Complied.
Byron Loomis,	Hotel,	2	1	Fusible plug; siphon pipe,	Complied.
Holyoke.					
Holyoke Savings Bank,	Bank,	1	-	Repair bridge wall,	Complied.
Estate of James F. Allyn,	Stores,	-	-	None,	-

Digitized by Google

Boiler Inspection Report — Continued.

NAME.	Building Used for —	Defects Found.		Orders Given.	Compliances.
		Total.	Dangerous.		
Huntington.					
Charles E. Angell,	Saw mill,	-	-	None,	-
M. R. Fiske,	Saw mill,	-	-	None,	-
Henry E. Stanton,	Saw mill,	1	1	Renew fusible plug,	Complied.
Longmeadow.					
Daniel Cartie,	No building,	-	-	None,	-
Ludlow.					
City of Springfield,	Pumping station,	-	-	None,	-
City of Springfield,	Pumping station,	-	-	None,	-
Merrick.					
M. S. Tourtellette,	Ice house,	-	-	None,	-
Monson.					
Dr. Owen Copp,	Massachusetts Hospital for Epileptics.	-	-	None,	-
Dr. Owen Copp,	Massachusetts Hospital for Epileptics.	-	-	None,	-
Dr. Owen Copp,	Massachusetts Hospital for Epileptics.	-	-	None,	-
A. R. Wentworth,	Hotel,	-	-	None,	-

Digitized by Google

North Amherst.					
A. R. Cushman,	Paper mill,	1	1	Reduce pressure,	-
A. R. Cushman,	Paper mill,	2	1	Cut hand-hole; remove scale from tubes,	Complied.
A. R. Cushman,	Paper mill,	4	3	Remove scale from shell of boiler along water line; remove scale from tubes; to be inspected when orders are complied with; condemned on second inspection.	-
Orange.					
Chase Turbine,	No building,	2	-	Remove scale; instructions in care,	-
C. A. Williams,	Saw mill,	-	-	None,	-
Palmer.					
E. R. Pierce,	Hotel,	-	-	None,	-
R. B. Frances,	Machine shop,	4	2	Remove scale; repair bridge work; reduce pressure,	Complied.
Pittsfield.					
Stanley Electric Co.,	Electrical machinery,	-	-	None,	-
Richmond Furnace.					
Richmond Iron Works,	Blast furnace,	-	-	None,	-
Richmond Iron Works,	Blast furnace,	-	-	None,	-
North Blandford.					
Wm. C. Higgins' Sons,	Basket making,	-	-	None,	-
Springfield.					
City of Springfield,	No building,	-	-	None,	-

Digitized by Google

Boiler Inspection Report — Continued

NAME.	Building Used for —	Defects Found.		Orders Given.	Compliances.
		Total.	Dangerous.		
Springfield — Con.					
United States Government,	Armory,	2	1	No orders, as no authority,	-
United States Government,	Armory,	2	1	None,	-
United States Government,	Armory,	3	2	None,	-
City of Springfield,	Almshouse,	-	-	None,	-
City of Springfield,	Almshouse,	-	-	None,	-
Hinsdale Smith & Co.,	Stores,	-	-	None,	-
Bidwell & Loomis,	Stores,	-	-	None,	-
City of Springfield,	Almshouse,	-	-	None,	-
C. J. Bellamy,	Printing office,	-	-	None,	-
C. J. Bellamy,	Printing office,	-	-	None,	-
D. F. Graham, Supt.,	Y. M. C. A. training school,	-	-	None,	-
D. F. Graham, Supt,	Gymnasium,	-	-	None,	-
Estate of Elizabeth B. Fuller,	Stores,	-	-	None,	-
Cutler & Carter,	Stores,	-	-	None,	-
South Hadley.					
Earl H. A. Bagg,	Cider mill,	2	1	Cut hand-hole; put in fusible plug,	Complied.

Digitized by Google

Southampton.					
C. S. Olds,	Cider mill,	-	-	None,	-
G. D. Hannon,	Saw and cider mill,	-	-	None,	-
Wm. Ewing, Jr.,	No building,	-	-	None,	-
Southwick.					
J. F. Chapman,	Steamboat,	-	-	None,	-
J. F. Chapman,	Steamboat,	-	-	None,	-
Ware.					
Town of Ware,	Town hall,	4	2	Put in new tubes; protect dry plate; check in return near boiler; new lining in furnace door.	Complied.
Town of Ware,	Town hall,	2	1	Protect dry plate; check in return pipe,	Complied.
Savings Bank,	Bank,	-	-	None,	-
National Bank,	Bank,	-	-	None,	-
J. H. Storrs,	Hotel,	-	-	None,	-
J. H. Storrs,	Hotel,	-	-	None,	-
F. L. Basset,	Stores,	-	-	None,	-
J. D. Smith,	Stores,	2	-	Put drip on column; clean out back connection,	Complied.
D. A. Jennison,	Hotel,	-	-	None,	-
Town of Ware,	Road roller,	2	2	Put in fusible plug; caulk throat seam,	-
Town of Ware,	Stone crusher,	-	-	None,	-
F. F. Gilmore,	Hotel,	2	2	Lighten ball on safety valve; protect dry plate,	Complied.

Digitized by Google

Boiler Inspection Report — Continued.

NAME.	Building Used for —	Defects Found.		Orders Given.	Compliances.
		Total.	Dangerous.		
Ware — Con.					
C. H. Hitchcock & Co.,	Stores,	1	1	Protect dry plate,	Complied.
G. W. Dunham,	Trinity Episcopal Church,	-	-	None,	-
E. E. Richardson,	Library,	-	-	None,	-
E. E. Richardson,	East Congregational Church,	-	-	None,	-
J. F. Sheehan,	Parochial School,	-	-	None,	-
George A. Corser,	Iron foundry,	-	-	None,	-
Sullivan & Strong,	Laundry,	-	-	None,	-
M. E. Church Society,	Church,	-	-	None,	-
M E. Church Society,	Church,	-	-	None,	-
Warwick.					
A. D. Jennings,	Saw mill,	-	-	Instructions in care,	-
C. A. Williams,	Saw mill,	-	-	None,	-
C. Patenaude,	Saw mill,	-	-	None,	-
Whitney & Hapgood,	Saw mill,	-	-	None,	-
W. L. Hayden,	Saw mill,	-	-	None,	-
Whitney Bros.,	Saw mill,	-	-	None,	-

Digitized by Google

Morgan & Varce,	Saw mill,	-	-	None,	-
F. W. Belva,	Saw mill,	-	-	None,	-
Wendell Depot.					
W. W. Raymond,	Saw mill,	2	1	Reduce pressure; raise boiler; provide siphon pipe for steam gauge.	Complied.
Westfield.					
Town of Westfield,	School-house,	-	-	None,	-
Town of Westfield,	School,	-	-	None,	-
Town of Westfield,	School,	-	-	None,	-
Town of Westfield,	School,	-	-	None,	-
Town of Westfield,	School,	-	-	None,	-
Town of Westfield,	School,	-	-	None,	-
C. A. Hastings,	Whips,	-	-	None,	-
Westhampton.					
L. W. Clapp,	No building,	-	-	None,	-
Levi Burt,	No building,	-	-	None,	-
F. J. Pomroy,	No building,	-	-	None,	-
Williamsburg.					
Granes Bros.,	Carriage manufactory,	-	-	Instructions in care,	-
G. M. Bradford,	Saw mill,	4	3	Remove box from safety valve; clean boiler; caulk middle seam; clean mud and ashes from under boiler.	-
Thayer Manufacturing Co.,	Machine shop,	-	-	None,	-

Digitized by Google

Boiler Inspection Report — Concluded.

NAME.	Building Used for —	Defects Found.		Orders Given.	Compliances.
		Total.	Dangerous.		
Williamsburg — Con.					
A. C. Morton,	Saw mill,	-	-	None,	-
Prescott Williams,	Cider mill,	4	2	Condemned,	-
Hill Bros.,	Button manufacturing,	-	-	None,	-
G. C. Cook,	Blanket making,	-	-	None,	-

Digitized by Google

Report of Inspector Ferguson.

District No. 5.

Sir: — Respectfully submitted herewith, and in accordance with your order, I tender a tabulated statement and review of work of the past year.

The statute relating to the inspection of boilers has been carried out by me with proper consideration of the public safety as well as for the owners of the boilers. It has been my endeavor to exercise great care in inspections, and in cases of doubt to put the doubt upon the side of safety. The general conditions found about a boiler have to be considered, and should influence the inspector in forming his judgment. In cases where the boiler is old, the age frequently being unknown, the location destructive to the boiler, the attendance poor, the fittings and setting not for an instant safe, and the conditions such as lead to continued rapid deterioration, these conditions must affect the final opinion of the inspector, and lead to the ordering of a lower pressure until safer conditions exist. Boilers explode at times under what appear favorable conditions for their life, and therefore a suspicion must always be directed against a boiler. As an instance of this, I quote from a recent experience of mine where two boilers were set in a battery used for heating purposes. The boilers were sixteen years of age, the attendance and general appearance rather above the average of boilers used for this purpose. An inspection of the boilers revealed a weakness of the tubes, calling for new tubes. When the tubes were removed, an opportunity was presented for a more thorough inspection of the shell than could be obtained with the tubes in position, when it was found that twenty distinct holes caused by pitting were made through the length of the shell at various spots.

The examination of engineers and firemen has progressed favorably, and has assumed the most practical form. The steam boiler and fittings and engines, pumps, etc., used for the examination have been of assistance in developing the practical knowledge of the applicant. Applicants who have been refused a license in my district invariably try again, and upon second examination show a marked improvement in knowledge necessary to obtain a license. The section of the law relating to appeals was taken advantage of by many who were refused a license, and in many of the cases licenses were granted by the board of appeal. Such a result I would anticipate, as the applicant in nearly every instance was superior in knowledge on his second examination, having found

Digitized by Google

out his errors in his previous examination, and he would naturally inquire or find out between the two examinations upon those points upon which he was little informed.

Complaints in relation to violation of this statute were numerous the past year, and their investigation took up a considerable amount of time, and in the majority of cases these complaints proved to be without foundation.

Summary of Examinations.

First-class engineers,	15
Second-class engineers,	25
Third-class engineers,	63
Special engineers,	159
Hoisting and portable engineers,	29
Firemen,	301
Refused licenses,	369
Total number of examinations,	961
Total licenses issued,	592

Summary of Boiler Inspections.

Boilers inspected,	59
Boilers repaired,	42
Boilers condemned,	6
Number of defects,	269
Number of dangerous defects,	182
Complaints investigated,	369
Prosecutions,	4

Digitized by Google

Boiler Inspection Report.

DISTRICT No. 5.

NAME.	Building Used for—	Defects Found.		Orders Given.	Compliances.
		Total.	Dangerous.		
Beverly.					
Street Department,	Stone crusher,	8	6	Two patches in fire-box; fusible plug; raise combination; cut hand-holes; adjust holding down bolts on engine.	Complied.
Street Department,	Stone crusher,	8	7	Attach blow-off pipe of ample size; repair try cocks; fusible plug; cut hand-holes; raise combination.	Complied.
Street Department,	Steam drill,	3	2	Cut hand-holes; fusible plug; remove deposit,	Complied.
School Department,	School,	3	2	Two boilers in high school; larger safety valve; repair setting,	Complied.
School Department,	School,	-	-	None,	-
Cove School,	School,	9	5	Raise combination; protect dry sheet; remove deposit; repair blow-off pipe.	Complied.
South School,	School,	2	2	Two boilers; raise combination; protect dry sheet,	Complied.
Prospect Hill School,	School,	2	-	None,	-
Danvers.					
Eaton & Sears,	Shoe manufacturing,	3	2	Protect dry sheet; remove deposit; pressure not to exceed seventy pounds per square inch.	Complied.
C. A. Keith,	Shoe manufacturing,	3	2	Protect dry sheet; fusible plug,	Complied.
J. W. Fulloch,	Shoe manufacturing,	4	2	Renew fusible plug; remove deposit; repair water cock,	Complied.
R. D. Scott,	Machine shop,	3	3	Stop-valve on feed pipe; fusible plug; cut hand-hole,	Complied.
Gas Light Co.,	Gas house,	8	5	Remove deposit; stop-valve on feed pipe; fusible plug; repair water glass; pressure not to exceed twenty-five pounds.	Complied.

Digitized by Google

Boiler Inspection Report — Continued.

NAME.	Building Used for —	Defects Found.		Orders Given.	Compliances.
		Total.	Dangerous.		
Danversport.					
Ira Story,	Morocco manufacturing,	5	2	Repair safety valve; renew safety plug,	Complied.
Gloucester.					
Geo. Rowe,	Wood worker,	12	7	Put in man-hole; protect dry sheet; raise water column; repair setting; cut hand-hole; renew fusible plug.	Complied.
Chas. W. Luce,	Furniture,	8	5	Patch on bottom of shell; replace tubes; repair setting; renew fusible plug.	This boiler removed.
Ipswich.					
F. W. Mead,	Match manufacturing,	4	3	Repair safety valve; remove deposit; pressure to be carried, ninety pounds per square inch.	Complied.
Lawrence.					
Paul Hannagan,	This boiler was not set up,	-	-	None,	-
Manchester.					
Town of Manchester,	Stone crusher,	8	5	Remove deposit; cut hand-holes; fusible plug; reinforce blow-off; pressure, eighty pounds.	This boiler removed.
Peabody.					
Wm. P. Clark,	Morocco manufacturing,	2	2	Remove deposit; fusible plug; pressure, sixty-five pounds,	Complied.
William Gay & Son,	Soap manufacturing,	9	8	Repair safety valve; protect dry sheet; remove deposit; pressure to be carried, forty pounds.	Complied.
Joseph Prehore,	Shoe stock,	4	1	Protect dry sheet,	Complied.
Downing & Knapp,	Morocco manufacturing,	4	4	Protect dry sheet; cut hand-hole; extra bracing,	Complied.

Digitized by Google

Franklin, Osborn Co.,	Leather manufacturing,	20	15	Two boilers: repair setting; repair blow-off; renew fusible plug; remove deposit.	Complied.
Franklin, Osborn Co.,	Leather manufacturing,	2	-	None,	-
J. E. Osborn,	Leather manufacturing,	2	1	Protect dry sheet; remove scale,	Complied.
Thos. H. O'Shea,	Leather manufacturing,	3	1	Repair brick work at back end,	Complied.
Angus Reid,	Wood sawing,	3	3	Repair roof of boiler house; pressure not to exceed fifty pounds,	Complied.
Geo. M. Osborn,	- -	-	-	Raise combination; protect dry sheet; fusible plug; repair piping; pressure not to exceed twenty-five pounds.	Complied.
J. J. Donovan,	Machine shop,	2	2	Repair braces; fusible plug,	Complied.
A. L. Kraus & Co.,	Leather manufacturing,	7	4	Repair gauge cock and water glass; fusible plug; remove scale; repair blow-off.	Complied.
L. B. Southwick,	Leather manufacturing,	12	8	Condemned,	Complied.
L. B. Southwick,	Leather manufacturing,	12	11	Cut hand-hole; one and one-half inch blow-off pipe; remove scale; fusible plug; pressure not to exceed thirty pounds.	Complied.
John J. Walsh,	Wood sawing,	1	1	Remove corrosion on top head,	Complied.
Wm. P. Clark,	Leather manufacturing,	7	5	Remove deposit and scale; new blow-off; safety plug,	Complied.
Rev. M. Masterson,	School,	5	3	Lighter weights on safety valve; remove deposit; renew fusible plug.	Complied.
Town of Peabody,	Town house,	-	-	Two boilers: condemned,	Complied.
Warren National Bank,	Bank,	4	3	Repair brick work at back end; fusible plug; repair blow-off pipe and return pipe.	Complied.
South Danvers National Bank,	Bank,	4	3	Fusible plug; repair setting,	Complied.
Peabody Fire Department,	Engine house,	4	1	Remove scale and deposit,	Complied.
Pepperell.					
H. A. Parker,	Saw mill,	20	16	Two boilers: condemned,	Complied.
Salem.					
City of Salem,	Hoisting,	1	-	None,	-

Digitized by Google

Boiler Inspection Report — Concluded.

NAME.	Building Used for —	Defects Found.		Orders Given.	Compliances.
		Total.	Dangerous.		
Salem — Con.					
City of Salem,	Steam drill,	4	3	Cut hand-holes; expand tubes; fusible plug,	Complied.
City of Salem,	Steam drill,	5	4	Retube boiler; cut hand-holes; patch in fire-box; fusible plug,	Complied.
City of Salem,	Road roller,	3	2	Fusible plug,	Complied.
R. H. Robinson,	Machine shop,	6	2	Make seams and joints tight; pop. safety valve; fusible plug,	Complied.
P. D. Egan,	Tannery,	9	6	Remove deposit and scale,	Complied.
Massachusetts Broken Stone Co.,	Stone crusher,	10	3	Four additional braces; change water feed,	Complied.
City of Salem,	Almshouse,	11	2	Two boilers: raise water columns; remove deposit,	Complied.
City of Salem,	Fire engine house,	6	3	Protect dry sheet; repair safety valve; fusible plug,	Complied.
Lowell.					
A. J. Lynch,	Tannery,	1	1	Check valve on return pipe,	Complied.

Digitized by Google

Report of Inspector Baxter.

District No. 5.

Sir: — I herewith submit my first annual report, covering work done from June 1 to Oct. 3, 1898.

My work has been confined solely to boiler inspection, and during that time 217 boilers have been inspected; out of this number 6 were condemned as unsafe. Defects were found in large numbers, some not dangerous, others very much so. As far as can be seen, the public seem to favor inspection, and comply very readily to orders or suggestions made. There seems to be a little misunderstanding among owners of boilers about state inspection and insurance in chartered companies. In a great many instances we have received letters from parties notifying us that they had boilers for inspection. When we arrived where the boilers were, we found they were insured. It would have saved trouble and expense if we had been notified before making the journey. This is being better understood, and we are having less trouble in consequence.

Summary.

Number of boilers inspected,	217
Number of defects found,	261
Number of dangerous defects,	191
Number of boilers ordered repaired,	151
Number of boilers condemned,	6

Digitized by Google

Boiler Inspection Report.

DISTRICT No. 5.

NAME.	Building Used for —	Defects Found.		Orders Given.	Compliances.
		Total.	Dangerous.		
Ayer.					
Fitchburg R.R.,	Passenger station,	2	2	Check valve; fusible plug,	Complied.
Harlow & Parsons,	Rendering works,	-	-	Condemned,	-
G. J. Burns,	Sigsbee Manufacturing Co.,	2	1	Renew fusible plug; wash with solvent,	Complied.
E. Q. McCollester,	Cabinet manufacturing shop.	2	1	Fusible plug; wash with solvent,	Complied.
U. O. Taylor Co.,	Furniture,	2	1	Repair setting; wash with solvent,	Complied.
Wm. F. Sargent,	Blank books,	2	2	Renew fusible plug; repair dry sheet,	Complied.
Acton.					
F. R. Knowlton,	Cigar manufacturing,	1	1	Two boilers: repair setting of one boiler,	Complied.
West Acton.					
Hall Bros.,	Wooden ware factory,	3	2	Tighten one brace; tubes to be made tight; wash with solvent; reduce pressure to eighty pounds.	Complied.
South Acton.					
N. H. Tenney,	Machine, boiler shop,	-	-	None,	-
H. W. D. Proctor,	Saw mill,	1	-	Cut hand-hole over crown sheet,	-
West Acton.					
Whitcomb & Lawrence,	Overall manufacturing,	2	2	Renew fusible plug; raise the water column,	Complied.

Digitized by Google

North Acton.					
Allen G. Smith,	Saw mill,	2	2	Insert screw plugs over crown sheet and bottom of fire-box for cleaning purposes; renew fusible plug.	Complied.
Ashby.					
Alonzo A. Carr,	Saw mill,	1	-	Renew fusible plug,	Complied.
Amesbury.					
Town of Amesbury,	High school,	1	-	Two boilers: repair steam gauge,	Complied.
Briggs Carriage Co.,	Carriage factory,	5	5	Repair braces; settings; pop safety valve set at sixty pounds,	-
Briggs Carriage Factory,	Car shop,	4	3	Put check valve on return pipe; repair setting; replace handles on gauge cocks and water glass; enlarge drip to water column.	Complied.
Briggs Carriage Factory,	Blacksmith shop,	4	4	New return pipe; check valve on returns; repair setting; drip to water column.	Complied.
Beverly.					
City of Beverly,	City hall,	-	-	None,	-
City of Beverly,	Central fire station,	2	1	New blow-off pipe; lighter weight on safety valve,	-
City of Beverly,	West fire station,	3	3	Cut man-hole in boiler; larger safety valve; new flues,	-
A. Dodge & Son,	Grain elevator,	1	-	Renew fusible plug,	Complied.
J. L. Porter & Co.,	Shoe shop,	1	-	Renew fusible plug,	Complied.
P. E. Clarck,	Saw mill,	-	-	Renew fusible plug,	Complied.
E. B. Rogers,	Shoe shop,	-	-	Renew fusible plug,	Complied.
Silas Boyes,	Ice house,	-	-	Renew fusible plug,	Complied.
David C. Smith,	Ice house,	-	-	Put in fusible plug,	-
Concord Junction.					
Boston Harness Co.,	Harness factory,	1	-	Renew fusible plug,	Complied.

Digitized by Google

Boiler Inspection Report — Continued.

NAME.	Building Used for —	Defects Found. Total.	Defects Found. Dangerous.	Orders Given.	Compliances.
Chelmsford.					
E. R. Marshall,	Carpenter shop,	2	2	Renew fusible plug; repair setting,	Complied.
West Chelmsford.					
H. E. Fletcher,	Stone quarry,	4	4	Six boilers: renew fusible plug on four boilers,	Complied.
North Chelmsford.					
E. L. Russell,	Saw mill,	-	-	Condemned,	-
Dracut.					
Town of Dracut,	Parker Avenue school,	6	4	Renew fusible plug; repair setting; make boiler accessible for cleaning; put check valve on returns; independent blow-off for returns; blow-off to enter sewer; enlarge drip to water column.	Complied.
Georgetown.					
Willard C. Hardy,	Box factory,	-	-	None,	-
Groton.					
A. H. Thompson,	Saw mill,	-	-	None,	-
Gloucester.					
City of Gloucester,	Point grammar school,	1	1	New flues,	Complied.
City of Gloucester,	Hildreth grammar school,	4	3	New flues; lighter weight for safety valve; repair steam gauge,	Complied.

Digitized by Google

City of Gloucester,	Hovey grammar school,	1	-	Two boilers: renew fusible plug; wash with solvent,	Complied.
City of Gloucester,	Babson grammar school,	1	-	Two boilers: renew fusible plug,	Complied.
City of Gloucester,	City hall,	2	2	Raise water column; blow-off to be changed,	Complied.
City of Gloucester,	Forbes school,	-	-	None,	-
City of Gloucester,	Steam roller,	2	2	Patches to be put on fire-box,	Complied.
City of Gloucester,	Police station,	-	-	Repipe the blow-off; put in drip to water column; repair steam gauge.	-
City of Gloucester,	Stone crusher,	-	-	None,	-
Charles W. Crowe,	-	-	3	3	Renew fusible plug; repair setting; repair steam gauge,	-
J. Nutton,	Rendering works,	-	-	None,	-
W. A. Homans, Jr.,	Ice house,	2	2	Two boilers: put in fusible plug; repair steam gauge,	-
Joseph Norwood,	Oil works,	-	-	None,	-
Peterson & Elwell,	Seine works,	1	1	Put in fusible plug,	-
Gloucester Isinglass Co,	Isinglass factory,	2	2	Two boilers: renew fusible plug; repair setting,	-
Gloucester Gas Works,	Gas house,	-	-	None,	-
Burnham Brothers,	Marine railroad,	-	-	None,	-
First National Bank,	Bank building,	-	-	Two boilers: none,	-
Cape Ann Savings Bank,	Bank building,	-	-	None,	-
Haverhill.					
City of Haverhill,	Winter Street school,	-	-	None,	-
City of Haverhill,	Whittier school,	3	3	New flues; new return pipe; new handle on gauge cock,	Complied.
City of Haverhill,	High school,	-	-	None,	-
City of Haverhill,	Peabody school,	-	-	None,	-

Digitized by Google

Boiler Inspection Report — Continued.

NAME.	Building Used for —	Defects Found. Total.	Defects Found. Dangerous.	Orders Given.	Compliances.
Haverhill — Con.					
City of Haverhill,	Cogswell school,	-	-	None,	-
City of Haverhill,	Portland training school,	6	5	Enlarge drip to water column; put stop valve on top of boiler; check valve; put in blow-off pipe; larger safety valve.	Complied.
Lowell.					
C. B. Coburn Estate,	Store,	4	4	Return and blow-off pipe to be renewed; water column to be raised; check and stop valve or return pipe; repair setting.	Complied.
Ayer Home for Children,	Children's home,	2	2	Fusible plug to be renewed; stop valve between check and boiler,	Complied.
P. Dempsey & Co.,	Liquor store,	2	1	Stop valve between check and boiler; hand hose reinforced,	Complied.
Middlesex Odd Fellows' Ass'n,	Offices and halls,	2	2	Two boilers: have setting renewed on No. 1 boiler; fusible plug to be renewed.	Complied.
W. H. Bagshaw,	Manufactory,	-	-	None,	-
A. W. Sturtevant,	Machine shop,	3	3	Reduce pressure from eighty to seventy pounds; fusible plug to be renewed; setting to be repaired.	Complied.
County jail,	County jail,	-	-	None,	-
Walter Coburn & Co.,	Storehouse,	1	-	Stop valve between check valve and boiler,	Complied.
A. W. Fesler,	Apartment house,	-	-	Check and stop valves, put on,	Complied.
A. W. Fesler,	Lodging house,	1	1	Put check valves on return pipes,	Complied.
A. W. Fesler,	Lodging house,	1	1	Put check valves on return pipes; repair setting,	Complied.
Warren Clifford,	Dye house,	2	2	Repair setting; reduce pressure fifty pounds,	Complied.
Nesmith estate, F. Coburn, agent,	Offices and stores,	1	1	Put check valve on return pipe,	Complied.
W. W. Cary,	Machine shop,	1	1	Renew fusible plug,	Complied.

Digitized by Google

Shaw & Weir,	Store and hall,	1	-	Put check valve on return pipe,	Complied.
The Morning Mail Co.,	Printing office,	2	2	Check valve on returns; renew fusible plug,	Complied.
E. W. Hoyt & Co.,	Cologne manufactory,	2	2	Repair setting; check valve on returns,	Complied.
E. W. Hoyt & Co.,	Stores and offices,	3	1	Cut hand-holes; check valves on returns; repair setting,	Complied.
E. W. Hoyt & Co.,	Stores and offices,	1	-	Put check valves on returns,	Complied.
City of Lowell,	Green school,	1	-	Renew fusible plug,	Complied.
City of Lowell,	Worthen school,	1	-	Renew fusible plug,	Complied.
City of Lowell,	Kirk street school,	2	1	Return pipe to be new; renew fusible plug,	Complied.
City of Lowell,	Weed street school,	-	-	None,	-
City of Lowell,	Carter street school,	1	1	Two boilers: repair setting,	Complied.
City of Lowell,	Butler school,	2	2	Two boilers: repipe water column; repair setting,	Complied.
City of Lowell,	Agawam Street school,	2	-	Change spring on safety valve; make boiler accessible for inspection.	Complied.
City of Lowell,	Lyons Street school,	-	-	None,	-
City of Lowell,	Central Street school,	2	1	New flues; remove flues; replace with screw plug for inspection purposes	Complied.
City of Lowell,	Coburn school,	1	-	Renew fusible plug,	Complied.
City of Lowell,	Ames Street school,	2	-	Cut hand-holes; renew fusible plug,	Complied.
City of Lowell,	Charles Street training school.	2	1	New flues; cut hand-holes,	Complied.
City of Lowell,	Charles Street primary school.	3	3	Put on check valves and stop valves; renew fusible plug,	Complied.
City of Lowell,	Edison school,	1	-	Renew fusible plug,	Complied.
City of Lowell,	Favor Street school,	2	-	Cut hand-holes; renew fusible plug,	Complied.
City of Lowell,	Highland school,	-	-	Condemned,	-
City of Lowell,	Franklin school,	4	-	Change the piping; leave out top flue for hand-hole; new safety valve; renew fusible plug.	Complied.

Digitized by Google

Boiler Inspection Report — Continued.

NAME.	Building Used for —	Defects Found. Total.	Defects Found. Dangerous.	Orders Given.	Compliances.
Lowell — Con.					
City of Lowell,	Dover Street school,	2	2	Renew fusible plug; new return pipe,	Complied.
City of Lowell,	Middlesex Village school,	4	-	Put in valves between check valve and boiler; stop valve on top of boiler; blow-off pipe to be changed.	Complied.
City of Lowell,	Mann school,	1	-	Two boilers: repair setting,	Complied.
City of Lowell,	Morrill school,	2	1	Renew fusible plug; wash with solvent,	Complied.
City of Lowell,	Old Bartlett school,	3	-	Renew fusible plug; repair setting,	Complied.
City of Lowell,	New Bartlett school,	1	-	Two boilers: repair setting,	Complied.
City of Lowell,	Tenth Street school,	2	-	Renew fusible plug; repair setting; wash with solvent,	-
City of Lowell,	West Sixth street school,	2	2	Repipe water column; renew fusible plug,	Complied.
City of Lowell,	Varnum school,	-	-	Condemned,	-
City of Lowell,	Lake View avenue school,	-	-	None,	-
City of Lowell,	Billings street school,	-	-	None,	-
City of Lowell,	Police station,	4	2	Valve put in feed pipe; water column changed,	-
City of Lowell,	City carpenter shop,	4	4	Raise water column; change feed pipe; put in check and stop valves; new flues.	-
City of Lowell,	Central fire station,	4	3	Check valves on returns; hand-hole, reinforce; new flues,	-
City of Lowell,	Central Street fire engine house.	4	3	Put check valves on returns; reinforce hand-holes; repair setting; repair steam gauge.	-
City of Lowell,	Westford Street fire engine house.	2	2	Put check valves on returns; blow off to water column,	-
City of Lowell,	Branch Street fire engine house.	2	2	Check valves on returns; repair leak at fire door,	-

Digitized by Google

City of Lowell,	Fletcher Street fire engine house.	2	2	Put check valves on returns; enlarge drip to water column,	-
City of Lowell,	Gorham Street fire engine house.	3	3	Enlarge drip to water column; put check valve on returns; stop valve, replace on top of boiler.	-
City of Lowell,	Lawrence Street fire engine house.	2	2	Enlarge drip to water column; put check valve on returns,	-
W. S. Knapp & Co.,	Hotel,	3	3	Stop valve on top of boiler; stop valves on returns; repair setting,	Complied.
Lawrence.					
City of Lawrence,	Arlington school,	-	-	None,	-
City of Lawrence,	Tarbox school,	-	-	None,	-
City of Lawrence,	Park street school,	1	-	Repair setting,	Complied.
City of Lawrence,	Lowell street school,	3	2	Place stop valve on return pipe; repipe water column,	-
City of Lawrence,	Warren street school,	2	1	Repair safety valve; change blow-off pipe,	Complied.
City of Lawrence,	Essex street school,	-	-	None,	-
City of Lawrence,	River Side school,	2	-	Repair setting; change blow-off,	Complied.
City of Lawrence,	Wetherbee school,	-	-	Two boilers: none,	-
City of Lawrence,	Saunders school,	2	2	Repair setting; repair steam gauge,	Complied.
City of Lawrence,	Saunders annex,	-	-	None,	-
City of Lawrence,	Packard school,	3	3	Repair steam gauge; repair setting; new return pipe,	Complied.
City of Lawrence,	Packard annex,	-	-	None,	-
Fred. Byron,	Brass foundry,	1	1	Put on injector,	Complied.
J. A. Glennie,	Soap factory,	2	2	Repipe water column; repair feed pipe,	Complied.
Bicknal Brothers,	Clothing store,	2	1	Renew fusible plug,	Complied.
E. Guinnette,	Carriage factory,	4	4	Put on injector, handle on gauge cocks and water glass; stop valve on boiler.	Complied.
Byron Truell,	Dry goods store,	3	3	Renew fusible plug; repair steam gauge; repair setting,	Complied.

Digitized by Google

Boiler Inspection Report — Continued.

NAME.	Building Used for —	Defects Found.		Orders Given.	Compliances.
		Total.	Dangerous.		
Lawrence — Con.					
Bay State National Bank,	- -	1	1	Replace valve in swing check,	Complied.
Lawrence National Bank,	- -	-	-	None,	-
William S. Knox,	Offices and stores,	4	3	Cut hand-holes; put check valve on returns; repair leak back of bridge wall at mud ring; renew fusible plug.	Complied.
William S. Knox,	Store,	2	2	New weight on safety valve; repair setting,	Complied.
Essex Bank,	Bank building,	3	3	Repair steam gauge; put in fusible plug; put on pop valve,	Complied.
City of Lawrence,	Lowell Street engine house,	1	1	Repair steam gauge,	Complied.
City of Lawrence,	Howard Street engine house,	2	2	Renew fusible plug; repair steam gauge,	Complied.
City of Lawrence,	Garden Street engine house,	1	1	New weight for safety valve,	Complied.
City of Lawrence,	Franklin Street engine house.	2	2	Put handles on water glass and gauge cocks; lighter weight on safety valve.	Complied.
City of Lawrence,	Morton Street engine house,	-	-	None,	-
City of Lawrence,	Park Street engine house,	-	-	None,	-
City of Lawrence,	Crosby Street engine house,	-	-	None,	-
City of Lawrence,	No. 5 fire engine,	-	-	None,	-
City of Lawrence,	No. 2 fire engine,	-	-	None,	-
City of Lawrence,	No. 3 fire engine,	-	-	None,	-
City of Lawrence,	No. 4 fire engine,	-	-	None,	-
City of Lawrence,	No. 7 fire engine,	-	-	None,	-

Digitized by Google

City of Lawrence,	No. 6 fire engine,	1	1	Flues rolled and made tight at one hundred and forty pounds pressure.	Complied.
City of Lawrence,	Haverhill high school,	3	3	Two boilers: fusible plug to be renewed; replace valves taken out of checks.	Complied.
City of Lawrence,	Manual training school,	3	3	Setting poor; raise water column; put on injector,	Complied.
City of Lawrence,	Normal training school,	2	2	Raise water column; repair setting,	Complied.
City of Lawrence,	Prospect Street school,	-	-	None,	-
City of Lawrence,	Rollings Street school,	-	-	None,	-
City of Lawrence,	Storrow Street school,	2	2	Repair setting; renew fusible plug,	Complied.
City of Lawrence,	Walton school,	1	1	Repair blow-off pipe,	Complied.
City of Lawrence,	Middle school,	1	1	Repair setting,	Complied.
City of Lawrence,	Harrington school,	-	-	None,	-
City of Lawrence,	Amesbury Street school,	2	1	Renew fusible plug; change blow-off pipe,	Complied.
City of Lawrence,	Hampshire Street school,	-	-	None,	-
City of Lawrence,	Franklin Street school,	-	-	None,	-
City of Lawrence,	Washington Street school,	3	3	Water glass to be raised; gauge cocks to put on boiler,	Complied.
W. R. Hart,	Iron foundry,	-	-	None,	-
C. K. Pilsbury Estate,	- -	-	-	None,	-
Newburyport.					
Trustees of Putnam fund,	High school,	2	2	Stop valve to be replaced on steam mains, and on returns,	-
City of Newburyport,	Kelley school,	2	2	Put blow-off on water column,	-
City of Newburyport,	Curtis school,	-	-	None,	-

Digitized by Google

Boiler Inspection Report — Concluded.

NAME.	Building Used for—	Defects Found. Total.	Defects Found. Dangerous.	Orders Given.	Compliances.
Peabody.					
Town of Peabody,	Centre school,	1	-	Enlarge hand-hole,	Complied.
Town of Peabody,	High school,	1	-	Change fusible plug,	Complied.
Town of Peabody,	Wallace school,	-	-	Wash with solvent,	Complied.
Town of Peabody,	Town hall,	-	-	Two boilers: put in new boilers,	-
Town of Peabody,	Central fire station,	-	-	Put in new boiler,	-
Town of Peabody,	Steam fire engine,	4	4	Boiler to be made tight at one hundred and fifty pounds pressure; recommend new boiler.	-
Pepperell.					
Town of Pepperell,	High school,	-	-	Condemned,	-
I. J. Rontell,	Grist mill,	1	-	Renew fusible plug,	Complied.
Flagg Manufacturing Co.,	Harp factory,	-	-	Two boilers: make accessible for inspection; change feed arrangements.	Complied.
Salem.					
City of Salem,	Old normal school,	-	-	Two boilers: repair setting on No. 2 boiler; make boiler accessible for inspection; repair steam gauge.	Complied.
City of Salem,	Bowditch school,	-	-	None,	-
City of Salem,	Philips school,	-	-	None,	-
City of Salem,	Bentley school,	1	-	Renew fusible plug,	Complied.
City of Salem,	Pickering school,	-	-	Cut hand-holes; renew fusible plug,	Complied.

Digitized by Google

City of Salem,	Police station,	-	-	Raise water column; renew fusible plug,	Complied.
Levitt estate,	Hotel,	2	2	Two boilers: repair steam gauge; put check valve on return pipe,	Complied.
Salem savings bank,	- -	1	-	Lighter weight on safety valve,	Complied.
Neal & Newhall,	Store,	-	-	None,	-
Kelton & Bruce,	Belts and lacing,	1	1	Repair setting,	Complied.
Shirley.					
Louis J. Farnsworth,	Saw mill,	1	1	Renew fusible plug,	Complied.
Tewksbury.					
Town of Tewksbury,	School-house,	2	2	Check valve on return pipe; lighter weight on safety valve,	-
Tyngsboro.					
Estate of J. G. Upton,	- -	2	2	Reinforce hand-hole; renew fusible plug,	Complied.

Digitized by Google

Report of Inspector Kazar.

District No. 6.

Sir: — I respectfully submit the annual report of my work performed in District No. 6, which comprises Norfolk County, a part of Middlesex and a part of Plymouth counties.

The laws relating to the inspection of boilers and the examination of engineers and firemen, having now been in force for over three years, have become generally known and understood, and I have met very little resistance or complaint in the performance of my duty.

The boilers in my district are so scattered that it requires a great deal of time and travel to reach them. This year I have examined 163 boilers, ordered 141 repaired and condemned 4.

The practical examination of engineers and firemen the past year has proved most satisfactory. It gives every man the opportunity to demonstrate his knowledge of a boiler and engine and procure a license.

During the year I have investigated over 100 complaints which have come to me from all over my district. Almost daily letters are received giving addresses of men who (they allege) are running engines and boilers unlawfully, and demanding that these men be prosecuted. Most of these accusations prove groundless, and much time is consumed in the investigation of them. I have prosecuted 6 men for violating the license law, and in 5 cases convictions have been obtained and fines imposed.

An interesting case occurred in my district at the beginning of the year. It was the explosion of a house boiler, and, although not under my jurisdiction, an investigation was made by me, at the request of the owner. This boiler was located in the cellar, for heating the house, and was in charge of a man who had the care of the stable and did general work about the place. It was blown into fragments; the floor above was badly wrecked and a lady severely cut about the face. I found the safety valve outside of the house and stuck fast on its seat. The steam gauge was located in the dining room, and the pointer on the wrong side of the pin. The owner said they carried about two and one-half pounds pressure, but had paid no attention to the gauge lately, as it did not register. I brought the gauge to Boston, and we found that the spring had expanded until it buckled in the centre. An exact duplicate gauge was tested, and it required two hundred and forty-five pounds pressure to put the spring in the condition of the old one. This case shows the necessity of some knowledge of steam in handling even small low-pressure boilers.

Digitized by Google

Summary of Examinations.

Applicants for licenses examined,	876
Licenses granted: —	
First class,	15
Second class,	33
Third class,	43
Special,	394
Fireman,	115
Hoisting,	15
Fire engine,	3
Total licenses granted,	618
Licenses refused,	258
New applications received,	707
Men convicted for working without license,	5

Summary of Inspections.

Boilers inspected,	163
Number of defects found,	295
Number of dangerous defects,	151
Number of boilers ordered repaired,	117
Number of boilers condemned,	4

Digitized by Google

Boiler Inspection Report.

DISTRICT No. 6.

NAME.	Building Used for —	Defects Found.		Orders Given.	Compliances.
		Total.	Dangerous.		
Newton.					
City of Newton,	Hoisting,	1	1	New safety valve,	Complied.
Estate of R. L. Barlow,	Ice cream manufacturing,	-	-	Condemned,	Complied.
Holliston.					
Elijah Partridge,	Grain mill,	5	2	New combination; fusible plug; water glass; repair brick work,	Complied.
George A. Fair,	Wood yard,	3	2	Reinforce hand-holes; new safety valve,	Complied.
Holliston Harness Co.,	Harness manufacturing,	4	2	Put in fusible plug, new pop safety and stop cock,	Complied.
Equity Boot and Shoe Manufacturing Co.	Shoe manufacturing,	6	2	Enlarge blow-off; repair brick work; repair tubes; put in fusible plug.	Complied.
Holliston High School,	School,	-	-	None,	-
S. Wilder & Co.,	Pump works,	1	1	Safety plug,	Complied.
Mowrey Straw Works Co.,	Straw shop,	8	4	Three boilers: enlarge safety valve; new safety plugs; reinforce hand-holes; repair brick work.	Complied.
Watertown.					
Watertown Hand Laundry,	Laundry,	-	-	None,	-
Otis Brothers,	Stores and offices,	-	-	None,	-
W. H. Pevear & Co.,	Wood yard,	2	1	Put in safety plug; repair steam gauge,	Complied.

Digitized by Google

Whitman.					
Catholic Church,	Church,	-	-	None,	-
Town of Whitman,	Stone crusher,	2	2	Two new gauge cocks,	Complied.
Louis Goulding,	Bottling mineral water,	2	-	Repack hand-holes,	Complied.
Read Tack Co.,	Tack manufacturing,	4	2	Enlarge safety valve; repair brick work; new blow-off pipe,	Complied.
Nantasket.					
John Au,	Merry-go-round,	2	1	Put in safety plug; repair steam gauge,	Complied.
O. D. Wade,	Hotel,	1	1	New safety valve,	Complied.
C. N. Grant,	Toboggan slide,	-	-	None,	-
Quincy.					
Walter H. Ripley,	Tool manufacturing,	-	-	None,	-
Angelo Malnati,	Monuments,	1	1	New injector,	Complied.
Henry W. Adrian & Co.,	Stone cutting,	1	1	New injector,	Complied.
Berry Bros.,	Hoisting stone,	-	-	None,	-
Estate of A. Reinhalter,	Hoisting stone,	2	2	Repair safety valve; new fusible plug,	Complied.
Medfield.					
Medfield Insane Asylum,	Hospital,	13	7	Six boilers: new stop cocks; two steam gauges; new main pipe,	Complied.
Hanson.					
E. Phillips & Sons,	Tack manufacturing,	2	2	Two boilers: injector and new tube,	Complied.

Digitized by Google

Boiler Inspection Report — Continued.

NAME.	Building Used for —	Defects Found.		Orders Given.	Compliances.
		Total.	Dangerous.		
Foxborough.					
State Inebriate Asylum,	Hospital,	8	3	Three boilers: put in safety plug; steam gauges; new fire jams; repair furnaces.	Complied.
Town of Foxborough,	Fire engine,	1	1	Repair steam gauge,	Complied.
Town of Foxborough,	Town hall,	2	2	Repair steam gauge; put on check valve,	Complied.
J. H. Alden,	Printing,	3	2	Enlarge blow-off pipe; new injector; repair steam gauge,	Complied.
Ashland.					
Josiah A. Balcom,	Shoe manufacturing,	3	2	Repair brick work; put in fusible plug; siphon pipe,	Complied.
Charles S. Brewer,	Shoe findings,	-	-	Condemned,	-
Baptist Church,	Church,	2	2	Cut two hand-holes; repair water glass,	Complied.
Ray Bros.,	Printing,	2	1	Repair hand-holes,	Complied.
Town of Ashland,	Fire steamer,	1	1	Repair steam gauge,	Complied.
Abner Greenwood,	Stores and hall,	3	2	New brick work; three-inch main valve; repair steam gauge,	Complied.
Hyde Park.					
Fairmount Manufacturing Co.,	Ladies' wear,	-	-	None,	-
Town of Hyde Park,	Stone crusher,	6	3	Two boilers: make rivets tight; two new stop cocks; support boiler; cut man-hole.	Complied.
Framingham.					
State Normal School	School,	6	3	Three boilers: new door linings; new fusible plugs,	Complied.

Digitized by Google

Camp Framingham,	Pumping station,	-	-	None,	-
Armour & Co.,	Beef house,	1	1	Repair steam gauge,	Complied.
Town of Framingham,	Fire engine,	2	2	Put in check valve; repair steam gauge,	Complied.
Town of Framingham,	Fire engine,	-	-	Three boilers: none,	-
Town of Framingham,	Fire engine,	3	1	Enlarge main connection; extend blow-off; new two and one-half inch valve.	Complied.
Norwood.					
Town of Norwood,	Everett school,	1	-	Repair safety valve,	Complied.
High School,	School,	-	-	None,	-
E. W. Dowd & Co.,	Foundry,	2	1	One-quarter inch stop cock; nipple; fusible plug,	Complied.
Abington.					
Pratt Bros.,	Printing,	4	2	New safety valve; siphon; one-half inch valve; repair steam gauge.	Complied.
Rockland & Arlington Street R.R.,	Car house,	3	1	Safety valve pipe; safety plug; lighter weight,	Complied.
Abington Savings Bank,	Stores and offices,	2	2	Two boilers: light safety weights and safety plugs,	Complied.
Wellesley.					
F. W. Shattuck,	Stores and offices,	1	1	Repair safety valve,	Complied.
Oliver Morse & Son,	Paper machinery,	3	2	New steam gauge; siphon pipe; repair brick work,	Complied.
Hunnewell School,	School,	-	-	None,	-
Randolph.					
S. A. Thayer,	Hay and grain,	-	-	None,	-
Norwood, French & Co.,	Shoe manufacturing,	4	1	Blow-off pipe; two gauge cocks; wheel on water glass,	Complied.

Digitized by Google

Boiler Inspection Report — Continued.

NAME.	Building Used for —	Defects Found.		Orders Given.	Compliances.
		Total.	Dangerous.		
Randolph — Con.					
Thos. L. Stetson,	Bone factory,	3	2	Repair hand-holes; two new tubes; safety plug,	Complied.
John K. Willard,	Bone factory,	6	5	Five new tubes; cut hand-hole,	Complied.
W. F. Barrett,	Shoe manufacturing,	6	3	New gauge cocks; injector; fusible plug; safety valve; repair steam gauge.	Complied.
Braintree.					
L. E. Penniman,	Saw mill,	-	-	None,	-
Brookline.					
J. W. Shapleigh,	Hotel Willard,	2	1	New brick furnace; safety plug,	Complied.
J. W. Shapleigh,	Hotel Verona,	1	1	Put in check valve,	Complied.
J. W. Shapleigh,	Hotel Wickfield,	1	1	New feed pipe,	Complied.
Brookline Laundry,	Laundry,	3	2	New safety valve; injector; repair tubes,	Complied.
E. S. Ritchie & Sons,	Compass manufacturing,	2	1	New injector; repair union,	Complied.
Dedham.					
Dedham & Hyde Park Gas Light Co.	Making gas,	1	1	Three-inch safety valve,	Complied.
Jacob Loris,	Manufacturing cardigan jackets.	-	-	None,	-
Holbrook, Cabot & Daly,	Portable and hoisting,	26	11	Eleven boilers: change and repair safety valves; new steam gauges, siphons, braces, drip cocks; enlarge blow-off pipes; new stay bolts on water leg.	Complied.

Digitized by Google

Milton.					
W. H. Mague,	Hoisting,	4	2	Three gauge cocks and one water glass,	Complied.
W. H. Mague,	Crushing stone,	2	1	New blow-off pipe and siphon pipe,	Complied.
W. H. Mague,	Crushing stone,	2	1	New gauge cocks; safety plug,	Complied.
W. H. Mague,	Steam road rollers,	-	-	Three boilers: none,	-
W. H. Mague,	Portable hoister,	3	2	New blow-off pipe; stop cock; two gauge cocks,	Complied.
W. H. Mague,	Stone crusher,	-	-	Two boilers: none,	-
Natick.					
Sheldon Bros. Co.,	Shoe manufacturing,	5	2	Three-inch blow-off; safety plug; new brick furnace,	Complied.
J. E. Woodill,	Bone factory,	-	-	None,	-
D. D. Sheehan,	Hotel,	-	-	None,	-
P. F. Doherty estate,	Machine shop,	-	-	None,	-
E. A. Hayes & Co.,	Shoe manufacturing,	3	2	Two-inch tee on blow-off; safety plug; repair water glass,	Complied.
T. N. Bassett,	Laundry,	3	2	Fusible plug; new blow-off cock,	Complied.
W. M. Bruce & Son,	Box manufacturing,	4	2	New gauge cocks; reinforce hand-hole; cut man-hole door; repair brick work.	Complied.
South Weymouth.					
Wm. Dyer,	Dwelling,	-	-	Condemned,	-
Bates school,	School,	7	3	Put in check valve, safety plug, feed pipe, lighter weights and main valve.	Complied.
Winchester.					
Geo. S Littlefield,	Furniture manufacturing,	6	2	New linings; new fire brick; smoke flue; repair steam gauge; new back arch and fusible plug.	Complied.

Digitized by Google

Boiler Inspection Report — Concluded.

NAME.	Building Used for —	Defects Found.		Orders Given.	Compliances.
		Total.	Dangerous.		
Winchester — Con.					
Geo. Portors,	Saw mill,	5	2	Patch on hand-hole; repair water glass; feed pipe; safety valve; safety plug.	Complied.
High school,	School,	-	-	Two boilers: none,	-
Wyman school,	School,	-	-	None,	-
Wadleigh school,	School,	-	-	None,	-
Gifford school,	School,	-	-	None,	-
Rumford school,	School,	1	-	Clean boiler,	Complied.
Chapin school,	School,	1	-	Clean boiler,	Complied.
Washington school,	School,	1	-	Clean boiler,	Complied.
Rockland.					
Geo. W. Hall,	Shoe manufacturing,	1	1	Put in safety plug,	Complied.
J. A. Torrey,	Soap manufacturing,	6	2	New brick work; put in hand-holes; new valve; safety plug and door linings.	Complied.
J. H. Locke & Co.,	Shoe manufacturing,	-	-	Condemned,	-
Congregational Church Society,	Church,	-	-	None,	-
J. A. Rice,	Stores and offices,	1	1	Put in fusible plug,	Complied.
Readville.					
O'Brine, McHale & Co.,	Hoisting and drilling,	40	9	Fifteen boilers: new safety plugs; siphons; gauge cocks; repair hand-holes; repair feed pipes; two new steam gauges; new tubes; drip cocks; change safety valve.	Complied.

Digitized by Google

Stoughton.					
Chapman & Sons,	Bicycle manufacturing,	1	1	Safety plug,	Complied.
J. E. Robbins,	Ice house,	1	1	Put in fusible plug,	Complied.
Lamont Pratt,	Tack manufacturing,	3	2	Repair steam gauge and siphon pipe; reinforce hand-hole,	Complied.
Sherborn.					
Sherborn Reformatory,	Prison,	2	2	Five boilers: put in two blow-off cocks,	Complied.
Brockton.					
J. W. Carson,	Stores,	1	1	New safety valve,	Complied.
Brockton Mallet Co.,	Manufacturing mallets,	-	-	None,	-
Tuck Manufacturing Co.,	Manufacturing tools,	2	2	New injector; safety plug,	Complied.
Charles Phelan & Co.,	Laundry,	1	1	Steam gauge,	Complied.
High School,	School,	1	1	Repair safety valve,	Complied.
Harvard School,	School,	-	-	None,	-
Perkins School,	School,	-	-	None,	-
Huntington School,	School,	2	1	New brick under dry sheet; safety plug,	Complied.
E. L. Bonney,	Box manufacturing,	2	2	New feed pipe; fusible plug,	Complied.
Campello Chemical Co.,	Manufacturing chemicals,	2	1	New safety valve; blow-off pipe,	Complied.
John P. Johnson,	Sawing wood,	4	2	New safety plug; new siphon; change water and blow-off pipes,	Complied.
South Hanover.					
N. V. Goodrich & Co.,	Shoe manufacturing,	1	1	New brick under dry sheet,	Complied.
E. Phillips & Sons,	Tack factory,	3	2	Two boilers: new tube; safety plug; injector,	Complied.

Digitized by Google

Report of Inspector McNeill.

District No. 7.

Sir: — I have the honor to submit my report of work done in District No. 7, Berkshire and Franklin counties.

The examinations, especially for the higher grades of license, have been facilitated by use of the engine, pump, safety valves, inspirator and various other steam appliances which I have in the office at North Adams.

In regard to the inspection of boilers, it does not follow that there will be any great decline in the number of defects observed or orders issued from year to year, as defects show up as boilers increase in age, and as many owners ask for inspection before doing their annual repair work.

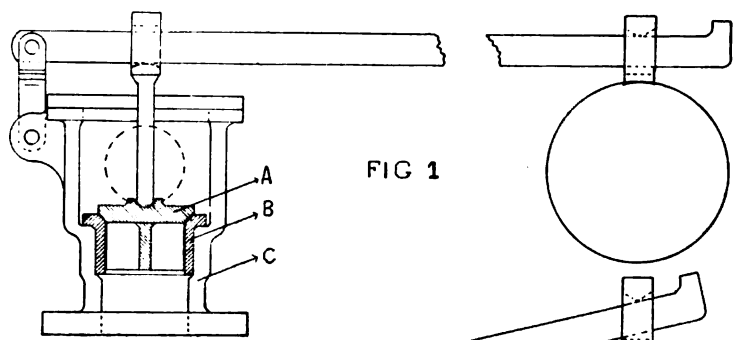

FIG 1

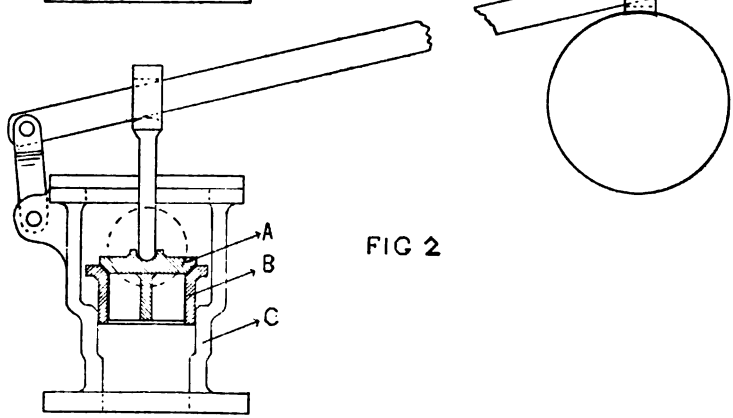

FIG 2

The accompanying sketches will illustrate one of the defective safety valves which I found upon a boiler in this district.

Figure 1 shows the safety valve, of ball and lever type, closed. Figure 2 shows the extreme point of opening; A, the valve disc (with three rings); B, the brass bushing; C, the cast-iron body

Digitized by Google

of the valve. The out-let, shown by the dotted circle on the side of the valve body, was piped out of the building, so that the internal parts of the valve could not be seen.

Blocking the lever up and then going inside the boiler, I tried the disc, which lifted freely. On removing the bolted cover from the top of the valve, however, and taking the spindle and disc out, I found the brass bushing, B, loose. In safety valves of this construction this brass bushing, which forms the valve seat, is forced into its place by a hydraulic or screw press, and even if the work is properly done, the unequal expansion and contraction of the different metals, will ofttimes result in the bushing becoming loose, as in this case.

The working of this valve under pressure is shown in Figure 2, the bushing rising with the disc and at a lower pressure than that at which the valve was set to blow, as now, the *total moment* keeping the valve down, is overcome by the pressure exerted on the area of the valve, plus the area of the lower end of the bushing. Therefore the weight, lever, spindle, disc and bushing were moved up and down, although the steam gauge did not register near the supposed blowing-off pressure, and the valve was inoperative under any pressure which might be raised in the boiler.

The several bad features of the valve shown — the lever without guides, the bushing not screwed or pinned in, the spindle separate from the disc and the action of the lever causing it (the spindle) to bind in the cover — condemn its use, and serve to show some of the advantages possessed by a spring-loaded or pop-safety valve for any and all steam boilers, and incidentally, features met with in boiler inspection work.

Summary of Examinations.

Applicants for license examined,		165
Licenses granted: —		
First class,	5	
Second class,	10	
Third class,	22	
Portable,	4	
Special,	69	
Firemen to have charge,	18	
Firemen to operate,	21	
Firemen, low pressure,	15	
		164
Licenses refused,		1
New applications received,		130
Boilers inspected,		164
Number of defects found,		326
Number of dangerous defects,		69
Number of boilers ordered repaired,		14

Digitized by Google

Boiler Inspection Report.

DISTRICT No. 7.

NAME.	Building Used for—	Defects Found. Total.	Defects Found. Dangerous.	Orders Given.	Compliances.
Adams.					
Peter Graton,	Laundry,	6	2	Check valve on feed; two new tubes; hand-hole over crown sheet; fusible plug; remove scale; reduce pressure.	Complied.
John M. Burke,	Wood yard,	1	-	None,	-
Catholic Diocese,	Church,	2	-	Set safety valve at twenty pounds,	Complied.
Catholic Diocese,	Church,	5	1	Drain valve on water column,	Complied.
A. H. Simmonds,	Stores,	4	1	Raise water column,	Complied.
Town of Adams,	Town hall,	5	2	Refill fusible plug; relocate steam gauge; remove obstruction above safety valve lever; set safety valve at twenty pounds.	Complied.
Congregational Church,	Church and parish house,	4	-	Set safety valve at twenty pounds,	Complied.
Congregational Church,	Church and parish house,	4	-	Set safety valve at twenty pounds,	Complied.
Methodist Episcopal Society,	Church,	2	1	Raise water column,	Complied.
Geo. H. Hoff,	Stores,	2	1	Put in fusible plug,	-
L. A. Weston,	Stores,	1	-	None,	-
F. L. Morse,	Hotel,	2	-	None,	-
Town of Adams,	Hose house,	-	-	None,	-
Jenks, Daniels & Legate,	Armory building,	1	-	None,	-
Jenks, Daniels & Legate,	Armory building,	1	-	Replace furnace door lining; protect dry sheet,	-
Albert A. Jones,	Stores,	1	-	None,	-

Digitized by Google

Harry Donohue,	Hotel,	4	3	Relocate safety valve to give full opening; new blow-off pipe; new return pipe.	Complied.
Walter Barber, Jr.,	Saw mill,	-	-	None,	-
J. M. Montgomery,	Hotel,	1	1	Remove obstruction over safety valve,	Complied.
Thos. P. Walsh,	Hotel,	1	-	None,	-
Fred. S. Todd,	Stores,	2	1	Put in fusible plug,	Complied.
W. L. Baker,	Wood yard,	2	-	None,	-
L. J. Follett & Son,	Lime quarry,	1	-	None,	-
D. B. Cook,	Wood yard,	3	1	Put in fusible plug,	Complied.
Jas. B. Dean,	Saw and grist mill,	2	1	Put plate over furnace door and protect dry sheet,	-
Town of Adams,	Road roller,	-	-	None,	-
Episcopal Diocese,	Church,	2	1	Put in fusible plug; renew feed pipe,	Complied.
Adams Gas Light Co.,	Gas house,	2	-	None,	-
John Allen,	Foundry,	4	2	Renew furnace door mouth pieces; protect dry sheet; larger escape pipe from safety valve, with drip.	Complied.
First National Bank,	Bank,	-	-	None,	-
Baptist Church Society,	Church,	-	-	None,	-
H. J. Arnold & Son,	Saw mill,	2	-	None,	-
M. C. Richmond,	Grist mill,	3	-	None,	-
Barrett Brothers,	Stores,	2	1	Put in fusible plug,	Not in use.
Becket.					
Wm. H. Snow,	Cider mill,	2	2	Cleared steam gauge pipe of sediment; removed three-quarter inch escape pipe from one and a quarter inch safety valve.	-
Chas. E. Lyman,	Carriage factory,	-	-	None,	-

Digitized by Google

Boiler Inspection Report — Continued.

NAME.	Building Used for —	Defects Found.		Orders Given.	Compliances.
		Total.	Dangerous.		
Cheshire.					
Greylock Creamery Association,	Creamery,	2	1	Put in fusible plug,	Complied.
Arthur Blush,	Hotel,	3	1	Put in fusible plug,	-
L. B. Wood,	Cider mill,	1	-	None,	-
W. B. Dean,	Saw mill,	4	1	Caulk girth seams; cut out defective part of shell, and put on a riveted patch.	Not in use at present.
W. B. Dean,	Saw mill,	3	-	None,	-
W. B. Dean,	Saw mill,	2	-	New rivet in diagonal brace; back end,	Complied.
Florida.					
Gilbert H. Mann,	Saw mill,	2	-	Sent notice of hydrostatic test,	-
Gilbert H. Mann,	Saw mill,	3	-	Made hydrostatic test at one hundred and thirty-five pounds pressure per square inch; no orders.	-
Great Barrington.					
Chas. N. Gilbert,	Portable,	-	-	None,	-
Syndicate P. A. Russell,	Berkshire block,	2	-	None,	-
Syndicate P. A. Russell,	Berkshire block,	3	-	None,	-
Watson & Burgett,	Stores,	2	-	None,	-
Mrs. Jas. K. Parker,	Stores,	1	-	None,	-
Congregational Society,	Church,	1	-	None,	-

Digitized by Google

Congregational Society,	Church,	3	-	None,	-
Estate Julia Sumner,	Stores,	-	-	None,	-
Town of Great Barrington,	Town hall,	3	-	Renew brickwork over furnace doors,	Complied.
Town of Great Barrington,	Town hall,	4	-	Renew brickwork over furnace doors,	Complied.
Episcopal Parish,	Church,	4	1	Renew brickwork over furnace doors; put in blow-off pipe,	Complied.
Town of Great Barrington,	Pumping station,	1	-	None,	-
E. J. VanLennet,	School,	3	1	Two try cocks on front head,	-
Chas. N. Gilbert,	Printing,	3	-	None,	-
Town of Great Barrington,	Library,	1	-	None,	-
J. B. Oliphant & Co.,	Stores,	1	-	None,	-
R. T. Pruyn,	Bottling,	1	-	None,	-
Town of Great Barrington,	Road roller,	1	1	None,	-
Town of Great Barrington,	Stone crusher,	-	-	None,	-
Caleb Ticknor & Son,	Hotel,	3	1	Put in fusible plug,	Complied.
Dr. W. P. Small,	Hotel,	2	-	None,	-
Burgett & Lewis,	Stores,	1	-	None,	-
T. F. Kennedy,	Hotel,	1	1	Put in fusible plug,	Complied.
James Crotty,	Hotel,	1	-	Siphon on steam gauge,	Complied.
Miller Estate,	Hotel,	2	1	Removed obstruction over safety valve lever,	-
Hollister Estate,	Stores,	2	2	Put on three try cocks; removed obstruction over safety valve lever.	Complied.
Town of Great Barrington,	Fire engine,	3	-	None,	-
Robert S. Dobbs,	Machine shop,	2	1	Put in fusible plug,	-

Digitized by Google

Boiler Inspection Report — Continued.

NAME.	Building Used for —	Defects Found.		Orders Given.	Compliances.
		Total.	Dangerous.		
Great Barrington — Con.					
Henry L. Robbins,	Stores,	2	-	None,	-
John R. Brewer,	Stores,	-	-	None,	-
Lee.					
Shute & Rightmyer,	Road roller,	3	-	None,	-
Shute & Rightmyer,	Stone crusher,	1	-	None,	-
New Marlborough.					
H. L. Barber,	Whip factory,	1	1	Enlarge safety valve; escape pipe,	Complied.
Turner & Cook,	Whip factory,	2	-	Put an additional try cock on water column,	Complied.
Whitney Bros.,	Blacksmith shop,	1	-	None,	-
William B. Gibson & Son,	Saw mill,	-	-	None,	-
William B. Gibson & Son,	Saw mill,	4	1	Drain safety valve; escape pipe,	-
North Adams.					
George N. Rich,	Bleachery,	10	4	New fusible plug; new connections to try cocks; retube boiler; check valve on feed pipe; clean boiler out; new stud rear hand-hole plate; new steam gauge.	Not in use.
George N. Rich,	Bleachery,	10	4	New fusible plug; new connections to try cocks; clean boiler out; new stud rear hand-hole plate; new steam gauge.	Complied.
Harry Mason,	Wood yard,	6	2	New stay bolt on side of fire-box; four new tubes; refill fusible plug; clean boiler out; have safety valve lift with spindle; check valve or feed.	Complied.

Digitized by Google

Thomas Platt,	Wood yard,	10	6	Patch on outside sheet; check valve on feed; new upper tube sheet; retube boiler; larger safety valve; one additional try cock; refill fusible plug.	New boiler.
R. B. Millard,	Wood yard,	6	1	Refill fusible plug; pipe blow-off valve; wash boiler out and use solvents; repair dry sheet; removed obstruction over safety valve lever; made hydrostatic test at eighty pounds pressure.	Complied.
City of North Adams,	Stone crusher,	2	-	None,	-
F. J. Barber,	Leather goods,	1	-	None,	-
City of North Adams,	Police station,	1	1	Check valve on feed,	Complied.
State of Massachusetts,	Normal school,	3	-	Caulk leaky rivet and girth seams,	Complied.
State of Massachusetts,	Normal school,	3	-	Tighten bolt in diagonal brace; caulk girth seam,	Complied.
State of Massachusetts,	Normal school,	1	1	Have steam gauge repaired,	Complied.
City of North Adams,	Poor farm,	5	3	Larger fusible plug; expand tubes; check valves on feed and return pipes.	Complied.
Wm. McGilpin & Son,	Laundry,	-	-	None,	-
J. H. Flagg,	Livery stable,	-	-	None,	-
Thos. Platt,	Wood yard,	3	1	Larger safety valve,	Complied.
City of North Adams,	Library,	1	-	None,	-
Fitchburg R.R. Co.,	Depot,	4	1	Renew brick work over furnace doors,	Complied.
W. H. Lally & Co.,	Hoisting,	4	-	Expand tubes,	Complied.
W. H. Lally & Co.,	Wood yard,	2	-	None,	-
Sandisfield.					
Lyman H. Clark,	Saw mill,	-	-	None,	-
Joseph Clark,	Box shop,	-	-	None,	-
Wm. P. Gladwin & Co.,	Oil of birch mill,	-	-	None,	-
Chas. E. Smith,	Saw mill,	1	-	Straighten safety valve lever; set valve at one hundred pounds,	Complied.

Digitized by Google

Boiler Inspection Report — Continued.

NAME.	Building Used for —	Defects Found.		Orders Given.	Compliances.
		Total.	Dangerous.		
Sheffield.					
Harlow E. Wilcox,	Saw mill,	4	-	None,	-
Williamstown.					
Williams College Corporation,	Physical laboratory,	4	-	New fusible plug; one new tube; new stud rear hand-hole plate; replace two-inch lever safety valve with a two-inch pop valve.	Complied.
John W. Reed,	Saw mill,	1	-	Refill fusible plug,	Complied.
John W. Reed,	Stone crusher,	5	2	Three new tubes; four new stay bolts; wash boiler out clean; set safety valve to blow at one hundred pounds.	-
Jas. P. Vining,	Hotel,	-	-	None,	-
Willard H. Mason,	Saw mill,	4	-	None,	-
Fitchburg R.R. Co.,	Pump house,	1	-	None,	-
Fitchburg R.R. Co,	Machine shop,	2	-	None,	-
Cornelius Wylde,	Boiler not set,	3	-	New stud rear hand-hole plate; wash boiler out; use solvents; set safety valve at eighty pounds; notify when ready for service, for further inspection.	Not in use.
Harry P. Galusha,	Saw mill,	1	-	None,	-
Harry P. Galusha,	Portable,	1	-	None,	-
Harry P. Galusha,	Portable,	2	1	Put in fusible plug,	Complied.
Jas. P. Vining,	Hotel,	3	1	Check valve on feed; siphon on steam gauge,	Complied.
Williams College Corporation,	Chemical laboratory,	2	1	Shorten safety valve lever; remove obstruction to safety valve lever; caulk girth seam over furnace.	Complied.
Williams College Corporation,	Chemical laboratory,	2	-	Caulk girth seam, rear end,	Complied.

Digitized by Google

Williams College Corporation,	Morgan hall,	1	-	None,	-
Williams College Corporation,	Gymnasium,	4	-	None,	-
Williams College Corporation,	Gymnasium,	-	-	None,	-
Williams College Corporation,	Hopkins hall,	-	-	None,	-
Williams College Corporation,	College hall,	2	-	None,	-
Williams College Corporation,	Goodrich hall,	1	-	None,	-
Williams College Corporation,	Clark hall,	-	-	None,	-
Bushnell Danforth,	Post-office block,	-	-	None,	-
Buckland.					
Edward Kenney,	Saw mill,	1	-	None,	-
Charlemont.					
Fred'k Hambleton,	Bobbin factory,	5	1	New safety valve; re-locate check valve on return pipe; repair brick work over furnace door.	Complied.
H. A. Rice,	Saw mill,	3	-	None,	-
Frary Mfg. Co.,	Wood turning,	5	1	New safety valve; repair brick work over furnace doors and combustion chamber top; rebuild brick pier under rear end of boiler.	Complied.
Fitchburg R.R. Co.,	Pump house,	1	-	None,	-
David T. Perry,	Road roller,	1	-	None,	-
Conway.					
Conway Electric St. R.R.,	Power station,	-	-	None,	-

Digitized by Google

Boiler Inspection Report — Concluded.

NAME.	Building Used for —	Defects Found.		Orders Given.	Compliances.
		Total.	Dangerous.		
Deerfield.					
Chas. L. Hayden,	Hotel,	1	-	None,	-
Edward P. Swan,	Pickle factory,	1	-	None,	-
Greenfield.					
Town of Greenfield,	Pierce Street school,	3	2	Put in fusible plug in place of solid cast-iron plug; larger safety valve on independent pipe from boiler; valve to be set at twelve pounds.	Complied.
Town of Greenfield,	High school,	2	-	Two boilers: none,	-
Town of Greenfield,	Union Street school,	1	-	None,	-
Town of Greenfield,	School Street school,	1	-	None,	-
Town of Greenfield,	Pleasant Street school,	1	-	None,	-
Town of Greenfield,	Chapman Street school,	1	-	None,	-
Town of Greenfield,	Fire department station,	1	-	None,	-
Leverett.					
Frary & Gates,	Box factory,	2	-	None,	-
J. Wesley Watson,	Saw mill,	1	-	None,	-
Dan. E. Glazier,	Portable,	1	-	None,	-
Montague.					
Montague Creamery Co.,	Creamery,	2	-	None,	-

Digitized by Google

Orange.					
Town of Orange,	Central school,	3	-	New blow-off pipe,	Complied.
Town of Orange,	Central school,	3	-	New blow-off pipe,	Complied.
Town of Orange,	High school,	1	-	None,	-
Town of Orange,	Town hall,	1	-	None,	-
Town of Orange,	Town hall,	1	-	None,	-
Eugene W. Lamb,	Stores,	-	-	Two boilers: none,	-
Town of Orange,	Fire engine,	2	-	None,	-
Town of Orange,	Fire engine,	1	-	None,	-
Orange Fraternal Hall Association,	Fraternal hall,	-	-	None,	-
Shelburne.					
Town of Shelburne,	Memorial building,	1	1	Change feed pipe connection; put on check valve,	Complied.
Shutesbury.					
Warren Ames,	Saw mill,	1	-	None,	-
Dwight S. Felton,	Saw mill,	-	-	None,	-
A. F. Felton,	Saw mill,	2	1	Put on three try cocks,	-
Whately.					
Orson E. Morton, Jr.,	Carpenter shop,	1	-	None,	-

Digitized by Google

Digitized by Google

REPORTS OF ACCIDENTS.

Digitized by Google

Digitized by Google

REPORTS OF ACCIDENTS IN MANUFACTURING AND MERCANTILE ESTABLISHMENTS.

In the work of inspection of factories and workshops, in which is included the laws relating to the guarding of machinery, there is no part of the same claiming more attention and consideration than that looking to the personal security and safety of those whose daily toil necessarily brings them amid surroundings much exposed to bodily risk and danger. The industrial interests of Massachusetts we know are very largely identified with manufacture; and machinery, as the great means and resource for production, is operated by thousands of busy hands, engaged in every kind and process of manufacturing. In the passage of laws to relieve and improve the conditions of labor, measures were also taken for the protection of life and limb; and the statute was enacted requiring that proper safeguards be provided in all places where dangerous machinery is located. This law is enforced by the inspection department of the district police, and reference to other pages of this report, where the work of the inspectors is presented, will show the progress in that direction.

The act of 1886, in relation to reports of accidents in manufacturing establishments, has operated with good effect, being, as it were, an enabling statute, affording means for investigation, the results of which, taken in connection with the enforcement of the law relating to the guarding of machinery, have proved in a very great degree beneficial. The report of an accident, the circumstances surrounding which appear to suggest examination and inquiry relative to the condition of the machinery which was the immediate cause of such accident, is placed in the hands of an inspector, with instructions to investigate the same, and ascertain if such

Digitized by Google

were due to any defect in said machinery, or if any part thereof is so placed as to be dangerous, and requiring the proper guard. One of the duties incumbent on every inspector is to familiarize himself with the details regarding the position of dangerous machines, so that whenever in the tour of his inspection work, he should find one of these, he can the more readily devise a way in which to remedy the defect and secure the necessary safeguard.

By Acts of 1894, chapter 481, which chapter was a codification of certain inspection laws, the statute providing for reports of accidents was re-enacted, and comprises sections 8, 9, 10 and 61 of the said chapter, which are as follows: —

REPORT OF ACCIDENTS.

SECT. 8. All manufacturers, manufacturing corporations and proprietors of mercantile establishments shall forthwith send to the chief of the district police a written notice of any accident to an employee while at work in any factory, manufacturing or mercantile establishment operated by them, whenever the accident results in the death of said employee or causes bodily injury of such a nature as to prevent the person injured from returning to his work within four days after the occurrence of the accident.

SECT. 9. When notice of any accident is sent to the chief of the district police under the provisions of section eight of this act he shall forthwith return to the sender of such notice a written or printed acknowledgment of the receipt of the same.

SECT. 10. The chief of the district police shall keep a record of all accidents so reported to him, together with a statement of the name of the person injured, the city or town where the accident occurred and the cause thereof, and shall include an abstract of said record in his annual report.

SECT. 61. Any person or corporation failing to send notice of any accident as required by section eight of this act, shall be punished by a fine not exceeding twenty dollars.

The total number of accidents reported during the year is 1,061. Of this number, however, there were 417 cases in which the persons injured were not engaged at the time in operating any kind of machinery; but the larger portion of whom were employed, in many cases, outside of the factory buildings; while the injuries received by many others were due to mishaps innumerable, such as happen in every-

Digitized by Google

day life at any time and in any place, as well as within the limits of a factory or workshop. The law does not specify as to the causes of accident to be reported, being general in its provisions; and it is presumed that manufacturers, not feeling as though they could take the responsibility of discriminating in the matter, conclude to make reports of all cases occurring on the premises, whether the accident was caused by machinery or otherwise.

In the following list will be seen the causes which led to these accidents, and the number of cases in each is here indicated. The cases mentioned as not enumerated are among the 417 before alluded to. The fatal cases are not included in this list, but the circumstances attending these will be reported in another place further on.

Injured by machinery in cotton, woollen and paper mills, shoe factories and electrical works,	420
Injured by machinery in iron works, planing mills and other mechanical establishments,	114
Injured by belting and pulleys,	32
Injured by elevators,	29
Injured by falling through elevator wells,	6
Injured while employed in general work about factories and workshops (principally laboring work),	272
Injured from scalds and burns (the former in dye houses, and the latter from molten iron in foundries),	25
Injured by breaking down of shaft, breaking of part of machine, bursting of emery wheel, bursting of pulley, an electric shock, explosion of apparatus used in making water gas and bursting of cylinder on slasher machine (one in each case),	7
Injured by circular saws (included in figures above given),	20
Injured while cleaning machinery which was in motion, or in attempting to remove from same bobbins, waste or other articles which had become entangled therein (included in figures above given),	180
Injured from causes not here enumerated,	127

The number of cases not enumerated in this list is made up from those to which reference was made as belonging to a class which the law is not intended to reach, as from the nature of the cases here given will appear evident. For instance, 25 accidents were reported in each of which the person was injured while handling tools used in working at a bench or in some like manner; 32 cases reported as many

Digitized by Google

persons injured by falls on stairways or by slipping or stumbling on the floors; 17 more suffered from getting splinters in their feet; 36 persons were struck by falling weights of various descriptions; and flying sparks, pieces of steel and missiles of some kind caused injuries to certain others. All these combined to make up the 127 cases not enumerated in the list given.

It will be noted in the foregoing list that 180 persons received their injuries while engaged in cleaning the machinery when the same was running or while they were attempting to remove from the same pieces of waste, bobbins, oil cans or something which had become caught or entangled therein. This number is 35 per cent. of all the injuries sustained in operating machinery, and is about the same proportion as that of last year. That carelessness, and in many instances it might be termed recklessness, should be the prime cause of more than one-third of the accidents from machinery is a fact much regretted, showing, as it does, that the exercise of ordinary care in their work would have saved these people much, and serious consequences in many cases would have been averted.

As to the nature of the injuries as the result of accident, mention may be generally made. In the greatest number of cases where machinery was the cause, the hands, and especially the fingers, suffered, 561 persons having had their hands more or less injured, in 5 cases the hand being lost, it being the right hand in 2 of those cases. In two cases the wrist was broken, and 429 cases showed injuries to the thumbs and fingers, in each of sixteen cases one or more fingers being lost. Partial loss of the thumb or fingers occurred in 70 cases. The other injuries were slight in their nature. There were 72 cases reported where injury to the arm resulted; in 1 of these the left arm was entirely lost, and in three other cases, 1 being the right arm, partial loss of the arm resulted. There were 171 persons injured about their lower limbs, and 8 or 10 cases where the leg was broken. Almost all of these latter cases were among the accidents which happened to men employed in laboring and outdoor work, and injuries general in their nature were sustained by the same class of workers in more than 100 other

Digitized by Google

cases. The injuries about the head were, except in few cases, of a slight nature, scalp wounds being received in about 10 cases; and about a dozen people were injured in the eyes, but nothing serious reported. About 80 of those who suffered injuries to their hands and fingers had the injury done by gears, and in most of these cases while they were cleaning the machinery when it was in motion.

The list of persons meeting with accidents numbers 854 males and 207 females. With a few exceptions, the female portion received their injuries from machinery, while the accidents occurring while engaged in general work, including all those outside of factory buildings, were confined to the male portion.

In one case where the arm was so injured that amputation was necessary, the facts were these: The injured person was employed in removing sawdust from under the machines, and at the time of the accident was taking sawdust from under a matching machine, which had two saws running in the centre of the table of the said machine. When he removed the sawdust with a shovel he had for the purpose, he put his left arm under the machine, when his arm came in contact with the saws and was lacerated badly. In pulling his arm away he slipped, causing his arm to come in contact again with the saws, and the bone of the arm was severed. He was taken at once to the hospital, where it was found necessary to amputate the arm just above the elbow.

There was the case of a boy who was engaged in taking some empty packing cases to the store room in the basement of the building; he was putting them on the elevator car, when in some way or by some one unknown the elevator was started, and the boy was caught in the same. His cry was heard by the person employed as shipper, who was just in time to stop the elevator and save the boy from being crushed to death. He was found with his head between a case, which was on the elevator, and the partition wall above the elevator door. His jaw-bone was injured, but the report stated he would be able to resume work in the course of a week from that time.

An accident occurred by a fall through an elevator well, which was attended with very serious results. The girl who

Digitized by Google

met with the accident was sent to get some bobbins, and, returning with them, went to the elevator and lifted the gate for the purpose of using the car, and reached out her hand to stop the elevator. She did not succeed in doing this, as the car passed on above the floor where she stood. Her attention being called to something in the room behind her, she turned her head quickly as she stepped toward the elevator shaft, supposing the car was at that floor, and she fell through the elevator well, a distance of three stories. One leg was broken in two places, and she received internal injuries. Her spine was very badly injured, leaving her deformed and causing permanent disabilities, and it is surprising that she survived all her terrible sufferings.

A very unfortunate case was that of a boy about seventeen years of age, who was employed in operating a waste-opener machine. In some manner which is not known his left arm was caught in the steel rollers and dragged through the same into the cylinder of the machine which the beaters run in on. These beaters are steel hooks which tear and break up the cotton as it passes through. The arm was drawn on these beaters and the steel hooks tore the flesh from the bones. The beaters severed the arm just below the elbow joint, when he succeeded in wrenching the bleeding stump from the machine. He walked some distance and sat down on a box, while those who had come to his aid tried in every possible way to prevent his bleeding to death. A doctor was summoned and the boy was taken to the hospital, where it was found necessary to amputate the arm above the elbow.

The number of accidents reported which resulted fatally is 29. Of this number, 4 occurred outside of the factory buildings. One of these was caused by an electric shock while at work on a street pole inspecting the wires. Another case was that of a man who was caught on a shaft in the yard of a granite company. A man was killed by a fall from a staging on which he was engaged in overlooking work being done on one of the tenement houses belonging to the company; and in another case, fatal injuries resulted by the tipping over of a car. In two other cases one was caused by the person being struck by a bale of wool which rolled out from a tier of bales where he was at work, and the other

Digitized by Google

case was that of a man who fell from a platform where he was at work brushing the walls of the room.

The causes leading to the other fatal accidents were as follows: in 7 cases death resulted from being caught and carried around the shafting; 5 persons were caught by elevators, and crushed; 2 others were fatally injured by falls in elevator wells, and 1 in each from the following causes: struck on the head by a large belt which had just been thrown from a pulley; by explosion of a tank in rubber works; caught in a moulding machine; by fall of an elevator car; caught by mule carriage and crushed; scalded to death in a vat of hot water; caught in wheel of machine; struck by a bar which was carried around by fly wheel of engine. An explosion of a boiler caused loss of life to 3 persons.

Investigations by the inspectors of this department, made in these cases, present such facts as could be ascertained from the circumstances attending each, which are below given, the name of each person being stated, as also the city or town and the establishment where the accident happened, as follows: —

James Mitchell, Lowell. Hamilton Manufacturing Company. Date of accident, January 1. This accident had a fatal result. He was engaged in brushing the walls, and was on a platform in the upper part of the building. The platform was about twelve feet high, was over the elevator, and was reached by an iron ladder leading from the floor below. No one can tell how the accident occurred, as Mitchell was alone at the time. He was found on the floor below, and was conveyed to the hospital, where he died on the 20th of January, as the inspector's report says, from internal injuries.

Fritz Sturm, Lowell. Consumers Brewing Company. Date of accident, January 7. This was a fatal accident. Sturm was employed in the new building belonging to the company, and in some manner unknown to anybody about the premises stepped into the elevator well. He must have fallen from the first or second story, as the elevator car was on a level with the third story at the time of the accident. He was found dead in the elevator pit by the night watchman, at 12 o'clock, midnight. The building is new, and the elevator, recently constructed, was in use but very little. Workmen were about ready to place the guards and automatic

Digitized by Google

gates in position around the openings, but no guards were in position at the time of the accident.

FRANK DERRAU, Lawrence. Washington Mills Company. Date of accident, January 31. This was a fatal accident. Derrau was a laborer, employed in the storehouse, and was at work moving bales of wool from a tier, when one of the bales, weighing some five hundred pounds, was loosened and rolled from the tier and over upon him, breaking his shoulder bone and injuring his spinal cord, completely paralyzing his body. He was conveyed to the hospital, where he died on February 2 from the effects of his injuries.

RICHARD DUFFY, Holyoke. Geo. C. Gill Paper Company. Date of accident, February 2. This was a fatal accident. Duffy was employed as a helper, and was assisting the engineer to put a cylinder washer around the shaft previous to lacing the belt. He wore a loose jumper, which was unbuttoned. He was about to pass the end of the belt around the shaft, and as he reached over the shaft with his left hand, the belt being in his right, the end of his jumper, it is supposed, caught in another belt, and his body was whirled around the shaft, killing him instantly. The mill speed was stopped as quickly as possible, but it was too late. Duffy had been employed in the mill about two years.

JOHN L. JONES, LAWRENCE and LA BLANC, Hubbardston. Ice house of Lawrence, Farrar & Stone. Date of accident, February 21. This accident was fatal in the cases of three men, and possibly in the case of another. The parties in charge of the ice had a boiler there to use while engaged in filling the house. The accident was caused by the blowing out of a wooden plug with which an attempt was made to plug a defective flue. Jones was the engineer, and started a fire and got some pressure on the boiler, when it was found that one of the flues leaked at the smoke-box end. He attempted to plug this flue with a pine plug, and it was said that there was about thirty-five pounds pressure on the boiler, when the plug blew out and let the water and steam into the cabin, which was used by the men at the ice house to sleep in, the accident occurring at night. Jones and Lawrence, and also a man named La Blanc, died from the effects of the burns they received, and Farrar was reported as being in a very critical condition, and might die from his injuries.

THOMAS KEENAN, North Adams. Arnold Print Works. Date of accident, April 1. This accident had a fatal result. Keenan was

Digitized by Google

employed in tending bleaching machines. The belt having slipped off the pulley, he passed in between two machines, the space not being over nine inches between the pulley of one and the shaft of the other, and put on the belt. In repassing to the front of the machine, his coat caught on the shaft, drawing him around the shaft and throwing him off against the wall in the rear, where he was found. He was removed to the hospital. Injury to the spine was caused, and he became paralyzed and unable to move at all. He died on May 19, as the result of the injuries received.

Simeon Perkins, Bridgewater. Bridgewater Iron Works. Date of accident, March 25. This was a fatal accident. A fire was discovered on the roof of the foundry which adjoined the building in which were located the force pump and some other machinery, including a small Sturtevant blower, run at high rate of speed. The belt running this blower is about fifteen feet from the floor of the building, and was from a large pulley to the blower. There is a passageway to the counter-shaft on which the pulley runs, consisting of two planks which are not railed. About the middle of this passageway is a brake controlling the power running the pump and blower, and, there not being power enough to force the water to the roof of the foundry building with the blower running, an employee was ordered to shut the power down so that the belt might be safely thrown off the blower. But while the power was being shut off, Perkins rushed in, set the power on again, ran to the pulley running the blower, and, picking up a piece of pipe, with it threw off the belt which struck him in the head, killing him instantly.

Louis Sharron, North Adams. Windsor Company. Date of accident, April 5. This accident was fatal. Sharron was employed as second hand in the dye house. He was on a ladder, and was putting on an 8-inch belt over a pulley which was on a shaft at right angles to the main shaft and about sixteen feet from the floor. The shaft on which the pulley was placed was not running, but in adjusting the belt he reached over the main shaft, which was running at the time about one hundred and thirty revolutions per minute, and his clothing was caught, and he was drawn over and around the shaft, his body being thrown at each revolution against the timbers which supported the floor above. As soon as the machinery could be stopped his body dropped to the floor, leaving almost all his clothing upon the shaft. He died before a doctor who was summoned could reach him.

Digitized by Google

THOMAS WHALEN, Springfield. United Electric Light Company. Date of accident, April 12. This accident was a fatal one. Whalen was a lineman in the employ of the company, and was killed by coming in contact with a live wire, while at work on a pole located on the street, and was inspecting the condition of the wires, from which he received the shock. No one was with him at the time of the accident, but from appearances he had evidently attempted to tie up with a rope a wire which he discovered had become loose from its insulator. When found, the body was lying at the foot of the pole. The burns on the back of the left hand and the sole and instep of the left foot showed the points of contact.

PATRICK GRADY, JOHN GALLAGHER, STEPHEN MCCORMICK and CHARLES HOLLINBECK, Cambridge. Boston Woven Hose Rubber Company. Date of accident, April 12. This accident was caused by an explosion, due to a defective tank. Patrick Grady, one of the four persons injured, was so badly burned that he died from the effects two days after the explosion took place. The three other men were more or less burned and cut.

THOMAS PARKER, Quincy. Old Colony Boot and Shoe Company. Date of accident, April 15. Parker was engaged in running a moulding machine. He was holding a tin dipper from which he had a drink of water. He dropped the dipper and it rolled under the machine, when he got on his knees and reached under to recover it. The machine is worked by a friction pulley, and is set in motion by the operator pressing a treadle with his foot, and a heavy toggle joint working towards the front of the machine completes bringing the mould together in the operation of moulding the sole. Parker placed his head between the toggle joint and iron upright at the front of the machine, and in some way pressed on the treadle, thus setting the machine in motion, his head being crushed between the iron upright and the toggle joint. He died from the effects of his injuries about five hours afterwards.

CHARLES H. PERKINS, Boston. Edward Kelley, Jr., & Co. Date of accident, April 15. Perkins was employed in taking a load of leather on the elevator up to the fourth floor. The car was filled with leather, and Perkins was standing on the cross beam, when from some cause the shaft in drum of elevator broke, and it came down with great force to the basement, where Perkins was found lying across the beam in a dying condition. There was no one present at the time of the accident. The elevator rope did not break, and thus the safety device was held back from work-

Digitized by Google

ing. The elevator must have fallen a distance of about fifty feet. There was a six-eighths-inch wire rope, no counter balance. Perkins died before the ambulance which was sent for arrived.

George W. Rouse, Tyringham. M. W. Stedman. Date of accident, April 25. This was a fatal accident. Rouse was employed in the work of making rakes. He was sent to put on a belt in the basement of the mill, and, not returning immediately, the owner of the factory went below to ascertain the cause, and found Rouse with his clothes wound around the shaft, his head between the arms of the pulley, and one arm torn off. His neck was broken. Death was instantaneous. He was extricated from his position within five minutes from the time he went below. It is not known in what manner he was caught in trying to put on the belt.

Pasquale Salerno, Boston. Eustis Lincoln Company. Date of accident, May 4. This was a fatal accident. Salerno was employed as an errand boy. Between eight and nine o'clock in the morning he opened the window shutters, as was his duty, and was not again seen until his body was found, decapitated, at the bottom of the elevator well, the head being on the third floor landing. Upon investigation it was ascertained that the elevator doors were fastened every night, and it would appear that Salerno must have unlocked them, pushed the elevator gate, and remaining standing on the landing outside of the elevator well, reached his hand in and pulled the rope, causing the elevator to ascend, catching him between the bottom car of the gate and the platform of the elevator, cutting off his head, carrying it up against the side of the elevator well (which showed marks of blood) to the third floor, where on reaching the landing the head fell on the floor, the body falling down from where he was struck to the bottom of the well. Salerno was about sixteen years of age. He had been cautioned to have nothing to do with the elevator.

Henry Reiser, Fall River. King Philip Mills. Date of accident, May 9. This accident resulted fatally. Reiser was employed as a second hand in the mule of the factory, and was changing rolls on a mule spinning machine, and at the time was standing between the mule carriage and the head of the frame. It is customary, when the rolls are all changed and the ends of the yarn entered between the rolls, to start the mule up so as to work the yarn into the rolls, and at the same time to disconnect the mule carriage; but it seems that this was not looked after this time,

Digitized by Google

and the carriage of the mule came up against Reiser, crushing his left knee, an iron bolt going almost through it. He was taken to his home and from there to the hospital, where he died June 14, 1898, from the effects of his injuries, blood poisoning having set in.

CHARLES F. PENNIMAN, Worcester. The Webb Granite and Construction Company. Date of accident, May 16. This accident was fatal. Penniman was climbing over a shaft which was in the yard of the Webb Granite and Construction Company, when his clothing was caught on the shaft and he was carried around the same, causing injuries from the effects of which he died about three hours after the accident.

GEORGE SEAVER, Boston. Stone & Eddy. Date of accident, May 19. This was a fatal accident. Seaver was a boy, and was instantly killed by being caught and crushed between the platform of the elevator and the second floor of the building. The inspector in his report states that on investigation he was unable to ascertain how the accident happened.

JOHN BRADY, Cambridge. M. M. Cofran & Co. Date of accident, June 17. Brady was employed as an engineer, and was engaged in oiling a shaft. The shaft is about three and one-half or four feet from the ground, and is used for driving machinery in a brick yard. As near as could be learned, he must have leaned against the shaft, and, having on a loose jumper, was caught and whirled around, his body striking against a water pipe which was just above the shaft. He was so badly injured that he lived but a few hours after the accident.

NASIE CARBONEAU, Cambridge. John Gerry. Date of accident, July 12. Carboneau was going to oil the shafting, and, instead of going to the proper place to do so, he went in between the belt, a distance of some ten or twelve feet, before he was caught by a set screw and thrown against the belt and into the pulley. The injuries he sustained were such that he died from their effects about twelve hours afterward. The inspector who investigated the case states in his report that Carboneau had been told never to go in the place where he went to oil the shaft.

JOHN KELLIHER, Melrose. Boston Rubber Shoe Company. Date of accident, September 20. This accident was caused by unloading a car from the elevator. The car was loaded with rubber shoes and boots, and run onto the elevator, then lowered to floor below. Upon reaching the floor or point to unload the elevator, the ele-

Digitized by Google

vator had passed some four inches below the floor, and could not be started to lift the load. The car was lifted by several men, and one end placed on the floor, the elevator then started, and before it could be stopped, ascended about three feet, causing the car to tip over forward, catching the man Kelliher under it in such a manner as to break his leg and back. After three hours suffering Kelliher died in the company's office.

Irwin W. Brown, Worcester. E. G. Higgins & Co., mercantile. Date of accident, October 19. Brown was on the third floor of the building. He went to the elevator well in order to use the elevator, which at the time was in the basement. He threw up the gate, stepped inside of the well and pulled the shipping rope, and, as the elevator came up, attempted to get on it. He got one foot on the platform, and in so doing lost his balance, and, as the elevator continued to ascend, Brown lost his hold and fell to the bottom of the shaft, receiving injuries that proved fatal. He was employed as a shipper.

William P. Ryan, North Adams. Arnold Print Works. Date of accident, October 20. Ryan was employed in the color shop. It appears that some misunderstanding occurred between one De Stefani and Lurcia, employees in the same shop. De Stefani seized Lurcia by the throat and forced him towards a vat of boiling water used as a washing tub, with the apparent intention of putting him in. Ryan, whose duty it was to wash the tubs, while in front of the vat came in contact with Lurcia and was forced backward into the vat, Lurcia falling on top of him. De Stefani, while still retaining his hold of Lurcia, caught hold of Ryan with one hand and with the assistance of others pulled both men out. Lurcia was not much injured, but Ryan's injuries were of so serious a nature that he died the following day.

Freeman C. Brown, Boston. Brattle Block. Date of accident, November 1. Brown was employed as an engineer. About ten o'clock he left the engine room, and his whereabouts was not known by the fireman. In the mean time Brown was engaged in oiling the bearings of the perpendicular shaft, which was located in the court yard of the building. As was the usual custom, he had leaned out of the windows, using an oil can with a long spout, and when about to oil the second bearing he obtained a ladder, placed it on a slanting shed, and went up the ladder to oil the bearing, when his clothing came in contact with the shaft, whirling him around and around, causing him to strike the wall, which was

Digitized by Google

some twelve inches from the shaft. His hold became relaxed and he fell onto the shed, where he was found with every bone in his body broken. He was conveyed to the Massachusetts General Hospital, where he expired early in the afternoon of the same day.

George Matthews, Boston. A. D. Hall & Sons. Date of accident, November 2. Matthews was using the elevator, and had started with two refrigerators from the first floor for the fourth floor. As he did not return for some minutes, search was made for him, and when found he was at the bottom of the pit. It is supposed that Matthews stepped off the elevator at the third floor and fell into the pit. In his fall down through the well his head struck on a sill, which caused his death.

William C. Norwood, Beverly. Seth Norwood Shoe Company. Date of accident, November 25. Norwood was foreman of the firm. The regular engine was being overhauled, and a smaller engine near by was running temporarily to take its place. Mr. Norwood came down stairs to watch the work being done on the regular engine. A bar of iron six feet in length and about one and seven-eighths inch in diameter was standing against a brick pillar between the two engines, and very near the fly wheel of the gasoline engine. The jar of the machinery caused the bar to slip and fall into the fly wheel of the smaller engine, which was making about three hundred revolutions a minute. In its course it struck the wall, bending it like a fish hook, so that it clung to the fly wheel, and as it came around it struck Norwood on the top of the head, crushing the skull so that the brain matter oozed out, killing him instantly.

Arthur S. Glass, Marblehead. A. J. Foster & Co., morocco factory. Date of accident, November 25. Glass was sent to clean out a pin-wheel machine for coloring skins. The machine was connected up, but the belt was on the loose pulley. In working around the machine he may have pushed the belt onto the fixed pulley, causing the wheel to revolve. He was in such a position that he could not extricate himself, and was crushed between the wheel and the frame it lays in. The accident occurred about 7.30 A.M., and he died at 12 M.

William C. Arrington, Boston. Scollay Building. Date of accident, December 3. Arrington had just been employed as night watchman, and it was his first time on duty. He was also in the capacity of fireman. He was last seen about 10.30 P.M. on

Digitized by Google

the night of December 3 by the engineer. On the arrival of the day man at the building on the morning of December 4, to relieve Arrington, he could not be found. On looking at the elevator, it was noticed that it was not entirely down; and upon starting it up beneath was seen the body of Arrington, crushed to death, lying on the wooden flooring. It would seem that Arrington went beneath the elevator to oil or clean the machinery, and must have pulled one of the ropes or come in contact with some part of the machinery, causing the car to start downward, and before he could stop the elevator it came down upon him, causing his death.

Digitized by Google

Digitized by Google

DETECTIVE DEPARTMENT.

Digitized by Google

Digitized by Google

REPORT OF THE DETECTIVE DEPARTMENT.

The work of the inspection department, already set forth, it is obvious, requires considerable mechanical knowledge and training and the most unremitting vigilance. Its result in a large degree may be tabulated, and this displays somewhat the industry of the inspector. The officers of the force intrusted with the specific duties of the detective department must also possess special qualities and have considerable experience in the detection and punishment of criminals. A considerable portion of the work of the detective department is that of investigation; from the nature of it, much time is expended in every important case. Witnesses must be sought, their statements must be carefully heard and analyzed in the light of known facts. They cannot always be summoned nor invited to headquarters during the preliminary stages of the inquiry, — they must be interviewed where they can be found. No inspector is presumed to begin his work in any case by constructing a theory, then proceed to frame evidence to support it. Acting, as they do, in most cases of any importance under the instructions of the district attorney, they collect all information that seems to be relevant, and perform an important part in the preparation of the case for the consideration of the grand jury and the courts.

It has ceased to be necessary, if it ever has been, to present reasons why no local force is always fully adequate to the task of suppressing crime and apprehending offenders against the law. Whatever may be true of the cities of the Commonwealth, the towns, large as well as small, require the services to a greater or less extent, in cases of serious offences, of a body of officers who are not under local influences and have the experience to deal with such matters. The district police are the right arm of the Executive. They

Digitized by Google

act under the authority and direction of the Governor, where the local police are unable to preserve the public peace. Since the establishment of this force there has been no occasion for the calling out of the militia and resorting to military measures to suppress mobs inclined to violence.

Some curious misapprehensions occasionally find utterance respecting the work which the State has assumed in cases; for example, of murders committed in the cities and towns of the State. But few cases of murder have occurred during the past twenty years but what officers of the district police have been promptly detailed to work on the case. It is no reflection upon the capacity nor diligence of the town officers that the aid of the Commonwealth was called in; but it has been said by those whose views on this subject are worthy of consideration that the action of calling on State officers is an attack on local government. "Why should the State police be engaged in policing her towns and villages or in hunting down her criminals? If life and property are unsafe here, whose duty is it to suppress the evils? The towns, no doubt; but if the towns do not do it, what then? Let the towns suffer, unaided and unrelieved by foreign aid, the full evils of their own misconduct? In no other way can the towns be taught to do their duty. In no other way can the towns be saved from childish impotence, from chronic feebleness, from moral cowardice and dishonor." The trouble with this view is that it ignores the constitution of Massachusetts. The crime was committed against the Commonwealth, and the jurisdiction is that of the Commonwealth, not that of the city or town. If it were a case of trespass, or of entering an orchard and stealing some fruit, the local court would be the proper tribunal, although the complaint would be that of the Commonwealth *versus* the person accused of the offence. In point of fact, the local police have not usually the skill, training and experience for such work, nor is it discreditable to them. The supreme jurisdiction is that of the State, and all its resources are none too great to hunt down and bring to justice the perpetrators of such monstrous crimes. If the view of police duty mentioned is correct, if it is of merely local concern that such criminals should be apprehended, then what course shall be adopted

Digitized by Google

in the many small towns which are too often the scenes of great crimes? It is the interest of the State that life and property shall be safe within its borders, and if the question remained to be settled at this late day, it ought to be apparent to the reflecting mind that the State could not properly delegate such an important function to be exclusively exercised by local communities, any more than it could empower the aldermen of a city or the selectmen of a town to call out the militia in times of public disturbance, when the civil officers had become powerless to enforce the laws. The State is the unit, not the city or town, and upon ground of expediency also, even if there were not more fundamental reasons, all the power and resources of the Commonwealth should be at once available in such cases as the atrocious crime mentioned, for it is a crime against the Commonwealth.

The officers of the detective department have done their work with skill and diligence and have entitled themselves to the commendation which reaches me from time to time from the district attorneys of the Commonwealth and from other responsible sources.

Inspection of Pawnbrokers' Books.

The evils which have yearly become more apparent relative to the irregular and in many cases illegal methods of a certain class engaged in the business of pawnbroking, and the still further enlarging the scope of the duties of the detective department of the district police, and affording them much better facilities for the prevention and discovery of crime and the arrest of the criminals and suspected persons, has led to the passage of chapter 515, Acts of 1898, which reads as follows: —

An Act to authorize the district police to examine pawnbrokers' books.

Be it enacted, etc., as follows:

Section six of chapter four hundred and ninety-seven of the acts of the year eighteen hundred and ninety-five is hereby amended by inserting after the word "police", in the fourth line, the words: — or any member of the district police, — so as to read as follows: — *Section 6.* Said book shall at all reasonable times be

Digitized by Google

open to the inspection of the mayor, the members of the board of police, the superintendent of police and deputy superintendents, the chief inspector of police, or any member of the district police, or any person who shall be duly authorized in writing for that purpose by any or either of them, and who shall exhibit such written authority to such pawnbroker. *Approved June 9, 1898.*

Special Duties.

Officers of the force have been called upon for special duty at Bolton, Clinton, Cummington, Marshfield, New Bedford, North Adams, Peabody, Southbridge, South Framingham, South Weymouth and Sturbridge.

Arrests.

Arrests have been made to the number of 367; total number of cases investigated, 919; total value of property recovered, $2,833.75.

Reports of Officers, by Districts.

Berkshire and Hampshire Counties.

Officer Moses H. Pease. Total number of cases investigated, 154; total number of arrests, 108.

Among the most important cases investigated were the following: —

Clara McMahon. Crime, burning a building. Found guilty; sentenced to the State Industrial School for Girls.

Eugene Brazee. Crime, rape. Case pending.

Isaac Coleman. Crime, fugitive from justice. Turned over to the State of New York officers.

William H. Armstrong. Crime, indecent assault. Case pending.

William E. Weed. Crime, felonious assault. Case pending.

Charles E. Smith. Crime, perjury. Case pending.

Barnstable, Bristol, Dukes and Nantucket Counties.

Officer Simeon F. Letteney. Total number of cases investigated, 96; total number of arrests, 37; total value of property recovered, $737.

Digitized by Google

Among the most important cases investigated were the following: —

Clarence Benson. Crime, breaking and entering. Found guilty; sentenced to the Massachusetts Reformatory.

Alonzo Lewis. Crime, larceny. Found guilty; sentenced to the Massachusetts Reformatory.

Joseph N. Snow. Crime, adultery. Found guilty; sentenced to nine months in the House of Correction.

Everett C. Kerien. Crime, larceny. Found guilty; sentenced to pay a fine of $140.

Edwin R. Snow. Crime, breaking and entering. Found guilty; sentenced to the Massachusetts Reformatory.

Warren R. Chase. Crime, breaking and entering. Found guilty. Placed on probation.

Curtis S. Higgins. Crime, breaking and entering. Found guilty; sentenced to three years in the House of Correction.

Elem Cash. Crime, breaking and entering. Found guilty. Placed on probation.

Chester C. Cahoon. Crime, breaking and entering. Found guilty; sentenced to one year in the House of Correction.

Bert Raymond. Crime, breaking and entering. Found guilty. Placed on probation.

Silas K. Crowell. Crime, larceny. Found guilty; sentenced to pay a fine of $50.

Tamsin Ann Taylor. Crime, larceny. Found guilty; sentenced to thirty days in the House of Correction.

Samuel R. Chase. Crime, false pretences. Found guilty; sentenced to pay a fine of $75.

George A. Andrews. Crime, false pretences. Found guilty; sentenced to eighteen months in the House of Correction, also to pay a fine of $100.

Luther L. Childs. Crime, arson. Found guilty; sentenced to the Massachusetts Reformatory.

Russell B. Childs. Crime, arson. Found guilty. Placed on probation.

Joseph B. Hill. Crime, adultery. Case pending.

Ann E. Phillips. Crime, adultery. Case pending.

David K. Cotell. Crime, breaking and entering. Found guilty; sentenced to the Massachusetts Reformatory.

W. Deane Jacobs. Crime, practising medicine, not being registered. Found guilty; sentenced to pay a fine of $100.

George R. Fearebay. Crime, breaking and entering and larceny. Case pending.

Digitized by Google

Officer Thomas A. Dexter. Total number of cases investigated, 84; total number of arrests, 22; total value of property recovered, $95.

Among the most important cases investigated were the following: —

JOSEPH SILORY. Crime, felonious assault. Found guilty; sentenced to pay a fine of $35.

JAMES TAYLOR. Crime, larceny. Found guilty. Placed on file.

ROBERT BURNS. Crime, fugitive from justice. Delivered to officers from the State of Rhode Island.

WILLIAM LEIGHTON. Crime, larceny. Found guilty; sentenced to four months in jail.

Aside from my shore duty, I was detailed on board the steamers "Corona" and "Lexington" from June 20 to November 1, said steamers being employed in the enforcement of the fishery laws.

Officer Alfred B. Hodges. Total number of cases investigated, 97; total number of arrests, 24; total value of property recovered, $658.75.

Among the most important cases investigated were the following: —

DANIEL DURFEE. Crime, breaking and entering. Found guilty; sentenced to the Massachusetts Reformatory.

WILLIAM HACKETT. Crime, larceny. Found guilty; sentenced to the Massachusetts Reformatory.

CHARLES COOPER. Crime, larceny. Found guilty; sentenced to six months in the House of Correction

JAMES SMITH. Crime, breaking and entering. Found guilty; sentenced to six months in the House of Correction.

ALVARINE GONSALVES. Crime, breaking and entering and larceny. Found guilty; sentenced to four months in the House of Correction.

PATRICK J. KEHOE, *alias* JOSEPH KEHOE. Crime, breaking and entering and larceny (two counts). Case pending.

JAMES B. HANDY. Crime, uttering forged check. Case pending.

JOSEPH W. FREITSCHE. Crime, larceny. Found guilty; sentenced to six months in the House of Correction.

WALTER KENT. Crime, larceny. Found guilty; sentenced to the Massachusetts Reformatory.

Digitized by Google

I have also worked on the following cases: —

WILLIAM H. BIRD. Crime, embezzlement. Found guilty; sentenced to fifteen years in the Massachusetts State Prison.

MATTHEW HORRIGAN. Crime, murder. Awaiting trial.

GEORGE R. FEAREBAY. Crime, breaking and entering. Awaiting trial.

Essex County.

Officer Daniel W. Hammond. Total number of cases investigated, 63; total number of arrests, 10.

Among the most important cases investigated were the following: —

CHARLES WILLIAMS. Crime, felonious assault. Found guilty; sentenced to not less than seven nor more than nine years in the Massachusetts State Prison.

EDWARD W. DAVIS, *alias* A. M. WALLACE. Crime, false pretences. Found guilty; sentenced to the Massachusetts Reformatory.

ISSABELLA THOMPSON. Crime, abortion. Awaiting trial.

I have also worked on the following cases: —

CHARLES E. CURRIER, *alias* C. L. FOLSOM, *alias* C. M. CLARK. Crime, obtaining money by false pretences. Found guilty; sentenced to not less than four nor more than five years in the Massachusetts State Prison.

LEWIS WARNER. Crime, embezzlement. Awaiting trial.

The murder of Annie Geary at West Peabody.

Officer George C. Neal. Total number of cases investigated, 59; total number of arrests, 15; total value of property recovered, $10.

Among the most important cases investigated were the following: —

ALFRED C. WILLIAMS. Crime, murder. Found guilty. Executed Oct. 7, 1898.

BARNEY J. LOGAN. Crime, breaking and entering. Found guilty; sentenced to not less than three nor more than five years in the Massachusetts State Prison.

WILLIAM E. CALLBECK. Crime, breaking and entering. Found guilty; sentenced to not less than ten nor more than fifteen years in the Massachusetts State Prison.

Digitized by Google

JOHN R. WIDGER. Crime, embezzlement. Found guilty; sentenced to pay a fine of $50.

PAUL YOUNG. Crime, embezzlement. Awaiting trial. Young was arrested in New Britain, Conn., and brought back on requisition papers.

JOHN BURKE. Crime, larceny of team. Found guilty; sentenced to two months in the House of Correction.

SAMUEL LUCAS. Crime, forgery and uttering. Awaiting trial.

JOHN A. STANLEY. Crime, forgery and uttering. Awaiting trial.

The murder of Annie Geary at West Peabody.

Franklin and Hampshire Counties.

Officer Benson Munyan. Total number of cases investigated, 45; total number of arrests, 22.

Among the most important cases investigated were the following: —

JOSEPH A. COBURNE. Crime, felonious assault. Held for the grand jury.

HENRY C. MILLER. Crime, lewd and lascivious cohabitation. Held for the grand jury.

LILLIAN HARRIS. Crime, lewd and lascivious cohabitation. Held for the grand jury.

EVA ADAMS. Crime, adultery. Held for the grand jury.

ABBY A. STILES. Crime, larceny (two counts). Held for the grand jury.

HENRY MARKS. Crime, lewd and lascivious cohabitation. Held for the grand jury.

EMMA WALLACE. Crime, lewd and lascivious cohabitation. Held for the grand jury.

CHARLES CAREY. Crime, lewd and lascivious cohabitation. Held for the grand jury.

EMMA B. GEORGE. Crime, lewd and lascivious cohabitation. Held for the grand jury.

PETER PIERCE. Crime, adultery. Held for the grand jury.

PEARL LAFOGG. Crime, lewd and lascivious cohabitation. Held for the grand jury.

Middlesex County.

Officer George Dunham was appointed on the force June 1, 1898, the following is a report of his work from that time: —

Total number of cases investigated, 21; total number of arrests, 12; total value of property recovered, $20.

Digitized by Google

Among the most important cases investigated were the following: —

JOHN H. KELLEY. Crime, breaking and entering and larceny. Found guilty; sentenced to one year in the House of Correction.

MICHAEL WELCH. Crime, arson. Case pending.

DANIEL HASTINGS. Crime, attempt to kill by poison. Found guilty; sentenced to not less than three nor more than four years in the Massachusetts State Prison.

AMOS L. PARKER. Crime, arson. Case pending.

Detailed for special duty at South Framingham eighty-six days.

Officer Josiah A. Bean. Mr. Bean has been a member of the department since April 22, 1880; he is now deceased. The following is a report of the work performed by him between Nov. 1, 1897, and Feb. 13, 1898: —

Total number of cases investigated, 25; total number of arrests, 10.

Among the most important cases investigated were the following: —

CHARLES H. WALKER. Crime, highway robbery. Found guilty; sentenced to not less than six nor more than seven years in the Massachusetts State Prison.

JOHN H. HIGGINS. Crime, highway robbery. Found guilty; sentenced to not less than four nor more than five years in the Massachusetts State Prison.

GEORGE H. WILLIAMS. Crime, larceny. Found guilty; sentenced to three months in the House of Correction.

Officer Naroy G. Burleigh was appointed on the force July 13, 1898, to fill the vacancy caused by Officer Jophanus H. Whitney being granted a leave of absence. Officer Whitney is colonel of the Fifth Regiment, now in the United States service.

The following is a report of Officer Burleigh's work from that time: —

Total number of cases investigated, 26; total number of arrests, 10.

Officer Jophanus H. Whitney. Colonel Whitney was granted an indefinite leave of absence on May 4, 1898, and is now with the Fifth Regiment in the United States service.

Digitized by Google

The following is a report of his work up to that time: —

Total number of cases investigated, 21; total number of arrests, 9.

Among the most important cases investigated was the following: —

JOHN REED, *alias* JOHN GREENHALGE, *alias* GEORGE E. SPENCER. Crime, larceny (two counts). Found guilty; sentenced to not less than eight nor more than ten years in the Massachusetts State Prison. Reed was arrested on a default warrant in Philadelphia, Penn., and brought back to trial on requisition papers.

Norfolk and Plymouth Counties.

Officer George C. Pratt. Total number of cases investigated, 64; total number of arrests, 19; total value of property recovered, $566.

Among the most important cases investigated were the following: —

Death of E. A. Godfrey of West Bridgewater. Godfrey's house was blown up and he was found dead. Case still under advisement.

DAVID W. CAMMERON. Crime, breaking and entering (five counts). Found guilty; sentenced to five years in the Massachusetts State Prison.

RICHARD L. FORD. Crime, breaking and entering. Found guilty; sentenced to the Massachusetts Reformatory.

OSCAR M. DRAKE. Crime, breaking and entering. Found guilty; sentenced to the Massachusetts Reformatory.

Suffolk County.

Officer Frederick A. Rhoades, detailed for duty at headquarters, State House, Boston, Mass.

Total number of cases investigated, 64; total number of arrests, 24.

Worcester County.

Officer Peleg F. Murray. Total number of cases investigated, 57; total number of arrests, 10; total value of property recovered, $747.

Among the most important cases investigated were the following: —

Digitized by Google

Dr. JOSEPH A. BACON. Crime, rape. Indicted. Defaulted.

GILBERT PETERS. Crime, murder. Pleaded guilty to manslaughter; sentenced to not less than ten nor more than thirteen years in the Massachusetts State Prison.

THOMAS SMITH. Crime, manslaughter. Found guilty; case placed on file.

DENNIS COCORAN. Crime, assault with a dangerous weapon with intent to kill. Pleaded guilty to assault with a dangerous weapon; sentenced to two years in the House of Correction.

RICHARD MURPHY. Crime, larceny from person. Found guilty; sentenced to one year in the House of Correction.

JOHN REED. Crime, assault with a dangerous weapon. Case pending.

JOHN REED. Crime, larceny of $5,500. Case pending.

Report of Officer William H. Proctor.

Officer Proctor is specially detailed to enforce the laws in regard to inland fisheries and game. Total number of cases investigated, 43; total number of arrests, 35. Amount of fines imposed by courts, $3,750.

I have commanded the State steamers "Corona" and "Lexington" during the past season, and report that there has been no violation of the fishery laws in Buzzard's Bay.

The steamer "Corona" was leased and put in commission on the sixth day of July, and her place was taken by the steamer "Lexington" on the sixth day of September. The steamer "Lexington" was put in winter quarters at Edgartown, on the thirtieth day of October.

The lobster fishermen seem determined to ruin their own business and make the lobster a thing of the past. They make their traps with laths or slats about one-half inch apart, so that they will catch lobsters as soon as they are large enough to crawl. The methods of concealing and destroying the lobsters make the ten and one-half inch law ineffective; and the only remedy that I know of is to oblige the fishermen to leave a space of two inches between the laths, so that the little lobsters can escape, or to have a close season, the same as they have in the British Provinces.

Digitized by Google

General Offences prosecuted.

Consolidated Statistical Report.

Abortion,	3
Adultery,	7
Aiding prisoner to escape,	1
Arson,	5
Assault and battery,	31
Assault with a dangerous weapon,	1
Assault with intent to kill,	4
Attempt to pass counterfeit money,	1
Bastardy,	1
Breaking and entering,	35
Breaking and entering and larceny,	6
Burglary,	4
Burning a building,	1
Capias,	5
Cheating,	2
Concealing birth of child,	1
Concealing death of child,	1
Cruelty to animals,	1
Defrauding boarding-house keeper,	1
Disturbing the peace,	45
Embezzlement,	5
Escaped prisoner,	2
Felonious assault,	5
Forgery and uttering,	3
Fornication,	2
Fugitive from justice,	1
Highway robbery,	2
Illegal gaming,	6
Illegal peddling,	5
Indecent assault,	6
Keeping a gaming house,	2
Larceny,	37
Larceny from person,	5
Larceny of team,	8
Lewd and lascivious,	16
Malicious mischief,	4
Manslaughter,	2
Murder,	1
Non-support of family,	2
Obtaining money by false pretences,	2
Perjury,	1
Rape,	2
Receiving stolen property,	3

Digitized by Google

Sodomy,	1
Stubborn child,	1
Transfer of prisoners,	25
Vagrant,	2
Violation of city ordinance,	1
Violation of the boiler law,	1
Violation of the building inspection law,	1
Violation of the clothing law,	1
Violation of the engineers' law,	20
Violation of the factory inspection law,	1
Violation of the fishery law,	29
Violation of the game law,	2
Violation of the gift enterprise law,	2
Violation of the insurance law,	4
Violation of the labor law,	3
Violation of the law in regard to the sale of poison,	1
Violation of the liquor law,	20
Violation of the Sunday law,	1
Total,	394

Roster of the Massachusetts District Police.

RUFUS R. WADE, *Chief.*

Central Office: State House, Boston, entrance Derne Street.
Branch Offices: Fall River, Lowell, North Adams, Salem, Springfield and Worcester.

Department of Inspection of Factories, Workshops and Public Buildings.

NAME.	District Assigned.	Residence.
Lewis F. F. Abbott,	District No. 5,	Worcester.
Henry J. Bardwell,	District No. 1,	Boston.
Edwin Y. Brown,	District No. 4,	East Boston.
Charles E. Burfitt,	District No. 1,	Boston.
Warren S. Buxton,	District No. 7,	Springfield.
Ansell J. Cheney,	District No. 8,	Beverly.
Charles A. Dam,	District No. 10,	North Adams.
Joseph M. Dyson,	District No. 5,	Worcester.
John E. Fonids,	District No. 6,	Fall River.
Joseph Halstrick,	District No. 2,	Boston.
James R. Howes,	District No. 7,	Holyoke.
Frederick W. Merriam,	District No. 10,	North Adams.
Joseph A. Moore,	District Nos. 2, 3 and 6,	Roslindale.
Isaac S. Mullen,	District No. 3,	Boston
Edward B. Putnam,	District No. 8,	Chelsea.
John J. Sheehan,	District No. 8,	Salem.
Malcolm Sillars,	District No. 9,	Danvers.
Henry Splaine,	District No. 9,	Dorchester.
John F. Tierney,	District No. 6,	Fall River.
Frank C. Wasley,	District No. 11,	Lowell.
John T. White,	District No. 1,	Arlington.
Mary E. Halley,	Special duty,	Lawrence.
Mary A. Nason,	Special duty,	Boston.

Digitized by Google

ROSTER OF THE MASSACHUSETTS DISTRICT POLICE — *Concluded.*

Department of Inspection of Ready-made Clothing.

NAME.	District Assigned.	Residence.
John E. Griffin,	District No. 1,	Boston.
John H. Plunkett,	District No. 2,	Boston.

Boiler Inspection Department.

Louis Amell,	District No. 3,	Worcester.
Sturgis E. Baxter,	District No. 5,	Roslindale.
David H. Dyer,	District No. 2,	Fall River.
Everett B. Dyer,	District No. 1,	Medford.
Charles Ferguson,	District No. 5,	Malden.
Thomas Hawley,	District No. 1,	Melrose.
John H. Kazar,	District No. 6,	Hyde Park.
John McGrath,	District No. 1,	Roslindale.
Joseph H. McNeill,	District No. 7,	North Adams.
Freeman H. Sanborn,	District No. 4,	Springfield.

Detective Department.

Naroy G. Burleigh,	Northern District,	Boston.
Thomas A. Dexter,	Southern District,	Edgartown.
George Dunham,	Northern District,	Newtonville.
Daniel W. Hammond,	Eastern District,	Haverhill.
Alfred B. Hodges,	Southern District,	Taunton.
Simeon F. Letteney,	Southern District,	Hyannis.
Benson Munyan,	Northwestern District,	Northampton.
Peleg F. Murray,	Middle District,	Worcester.
George C. Neal,	Eastern District,	Lynn.
Moses H. Pease,	Western District,	Lee.
George C. Pratt,	Southeastern District,	North Abington.
William H. Proctor,	Special duty,	Swampscott.
Frederick A. Rhoades,	Suffolk County,	Malden.

Clerk, JAMES P. CAMPBELL, Boston.
Assistant Clerk, JAMES W. HOITT, Lynn.
Clerk of Storehouse, BELLE C. DAVIS, Medford.
Storehouse Employees, JOHN COUGHLAN and TERRANCE MCSWEENEY, Boston.

THE DISPOSITION OF FORFEITED LIQUORS.

Chapter 100, section 38, provides as follows: —

SECT. 38. Any liquors so forfeited shall, by the authority of the written order of the trial justice or court, be delivered to the chief of the district police. Said officer shall sell the same and pay over the net proceeds to the treasurer of the Commonwealth.

The last Legislature passed an act providing for the seizure of implements and furniture used in the illegal selling of intoxicating liquors, which is as follows: —

Digitized by Google

[CHAPTER 406.]

AN ACT PROVIDING FOR THE SEIZURE OF IMPLEMENTS AND FURNITURE USED IN THE ILLEGAL SELLING OF INTOXICATING LIQUORS.

Be it enacted, etc., as follows:

SECTION 1. Section thirty of chapter one hundred of the Public Statutes is hereby amended by inserting after the word "contained" in the fifteenth line of said section the words: — and all implements of sale and furniture used in the sale of such liquor.

SECT. 2. Section thirty-three of chapter one hundred of the Public Statutes is hereby amended by inserting after the word "contained" in the third line of said section the words: — and all implements of sale and furniture used in the sale of such liquor.

SECT. 3. This act shall take effect upon its passage. [*Approved June 13, 1887.*

Under the law first above cited, liquor forfeited to the use of the Commonwealth, together with the casks or other vessels in which it is contained, have been turned over to my custody and dealt with as legally required.

When any liquors are received which seem to be of a better than average grade, which seldom happens, they are sold to the hospitals and for strictly medicinal uses.

The lager beer and ale received is sold to manufacturers of vinegar. Porter cannot be utilized at all, and it is poured into the sewer.

The lager beer bottles and cases, and the casks, barrels, kegs and other vessels are sold for what they will bring. No liquor or packages are sold to the parties from whom they are seized under any circumstances.

Complete records are made and preserved of every transaction, from the time of the seizure of the liquors to its final disposition under the law, and it would seem to be impossible for any improper use to be made of it.

Under the amendment of the law, chapter 53, Acts of 1887, forfeited liquors are required to be forwarded to this office by common carriers, and not as formerly by an officer designated by the court ordering forfeiture; and the expense of transportation must be paid from the sales of the liquors and vessels received.

Digitized by Google

I annex a schedule showing the cities and towns from which the liquor has been received, and the quantity that has been turned over to me up to the present date: —

Forfeited Liquors from Dec. 1, 1897, to Dec. 1, 1898.

City or Town.	Number of Seizures.	Spirituous.				Malt.			
		Gallons.	Quarts.	Pints.	Gills.	Gallons.	Quarts.	Pints.	Gills.
Abington,	6	26	–	1	–	79	3	–	–
Acton,	1	–	1	–	–	–	–	–	–
Amesbury,	7	6	–	1	–	155	–	1	–
Arlington,	2	6	1	–	–	115	2	–	–
Ashland,	3	5	1	–	–	36	2	1	–
Athol,	2	11	1	–	2	45	2	–	–
Auburn,	1	–	–	–	2	22	–	–	–
Ayer,	2	–	1	1	2	2	3	–	–
Barnstable,	1	3	–	–	–	–	–	–	–
Belchertown,	2	10	3	1	–	33	3	–	–
Beverly,	9	4	1	–	1	–	3	–	–
Boston,	462	427	–	1	2	5,350	2	1	–
Bridgewater,	5	5	1	1	2	52	–	–	–
Brockton,	28	30	2	1	–	27	2	1	–
Brookline,	2	2	1	–	–	11	1	1	–
Cambridge,	7	1	2	1	–	64	–	1	–
Canton,	1	–	–	–	–	7	–	–	–
Chatham,	1	–	2	–	–	–	2	1	–
Chelsea,	50	29	2	1	–	129	2	–	1
Chester,	1	–	1	–	–	–	1	1	–
Chicopee,	5	–	3	1	1	16	3	1	2
Clinton,	17	25	–	–	1	94	1	1	–
Cohasset,	2	34	–	1	–	8	–	–	–
Danvers,	4	1	–	–	–	22	1	1	–
Dedham,	1	–	–	–	–	25	2	–	–
Dennis,	1	–	1	1	3	–	–	–	–
Douglas,	3	–	–	1	2	13	3	–	–
Duxbury,	4	8	1	–	–	47	1	–	–
Easton,	6	4	3	–	3	91	2	–	1
Everett,	4	–	1	–	2	28	2	–	–
Fairhaven,	1	–	1	1	–	–	3	–	–
Fall River,	24	17	2	1	2	72	3	1	–
Fitchburg,	71	79	3	1	1	772	2	–	–
Foxborough,	3	–	2	–	2	21	3	–	–
Framingham,	41	12	3	1	–	470	2	1	3
Franklin,	5	4	3	–	–	5	1	–	–
Gloucester,	79	33	2	–	3	302	–	1	2
Greenfield,	2	60	1	1	–	1,002	–	–	–
Hanover,	1	–	–	–	–	1	–	–	–
Hardwick,	4	2	1	2	2	4	–	1	–
Harwich,	1	–	3	–	–	–	–	–	–
Haverhill,	24	11	3	–	2	482	2	–	–
Hingham,	1	3	3	1	–	–	–	–	–
Holden,	1	–	–	–	–	4	2	–	–
Holliston,	1	1	3	–	–	40	–	1	–

Digitized by Google

Forfeited Liquors, etc. — Continued.

City or Town.	Number of Seizures.	Spirituous.				Malt.			
		Gallons.	Quarts.	Pints.	Gills.	Gallons.	Quarts.	Pints.	Gills.
Hopkinton,	2	2	3	1	-	41	1	1	-
Hubbardston,	3	58	1	-	1	46	-	-	-
Hudson,	1	-	-	-	-	21	-	-	-
Hyde Park,	13	7	1	1	2	102	1	1	-
Kingston,	2	-	-	-	-	17	-	-	-
Lancaster,	2	-	1	-	2	7	-	-	-
Leominster,	8	30	1	-	1	88	-	-	-
Lexington,	1	19	-	-	2	27	-	-	-
Lowell,	12	6	3	1	2	55	-	-	-
Lunenburg,	2	-	-	-	-	17	1	-	-
Lynn,	102	44	2	1	1	1,696	3	1	2
Lynnfield,	2	1	1	-	-	36	1	-	-
Malden,	26	13	3	1	3	96	1	1	-
Marblehead,	3	1	-	1	1	-	-	-	-
Marlborough,	8	4	1	1	3	61	1	-	1
Marshfield,	1	-	1	-	-	14	-	1	-
Medford,	3	-	2	-	-	4	-	-	2
Melrose,	2	11	2	-	1	11	1	-	-
Methuen,	1	-	-	-	-	3	-	-	-
Middleborough,	1	-	-	1	-	8	-	-	-
Millbury,	2	2	-	-	-	5	-	-	-
Nahant,	13	1	3	1	2	25	2	-	3
Natick,	9	7	1	1	-	490	3	-	-
New Bedford,	6	2	2	1	-	8	2	1	-
Newburyport,	5	6	3	1	2	55	2	-	-
Newton,	10	-	2	1	-	233	2	-	-
North Adams,	8	-	-	1	3	75	1	1	-
Northampton,	1	1	2	-	-	36	-	-	-
Northborough,	1	-	1	-	-	7	-	1	-
North Brookfield,	6	6	1	1	1	37	-	-	-
Norwood,	2	-	3	-	-	3	-	-	-
Orange,	3	2	-	-	2	19	3	1	-
Palmer,	8	25	2	-	2	8	-	-	3
Peabody,	7	2	-	1	2	53	1	1	-
Plymouth,	6	5	3	1	1	139	-	-	-
Provincetown,	1	-	-	-	2	1	-	1	-
Quincy,	12	8	2	-	-	181	-	-	-
Rehoboth,	1	-	1	-	-	1	-	-	-
Revere,	13	2	1	-	-	164	1	-	2
Rockland,	5	1	-	-	2	31	-	-	-
Rockport,	2	5	1	-	-	3	-	-	-
Salem,	16	9	3	1	-	206	-	1	2
Scituate,	5	7	-	1	-	14	3	-	-
Shirley,	2	1	-	1	-	-	2	-	-
Shrewsbury,	6	1	3	-	-	42	-	-	-
Somerset,	1	3	1	-	-	27	3	-	-
Somerville,	15	19	3	1	3	95	1	-	-
South Hadley,	1	1	1	-	-	8	-	-	-
Spencer,	4	12	-	-	-	18	-	1	-
Sterling,	3	2	1	-	-	82	-	-	-

Digitized by Google

Forfeited Liquors, etc. — Concluded.

CITY OR TOWN.	Number of Seizures.	Spirituous.				Malt.			
		Gallons.	Quarts.	Pints.	Gills.	Gallons.	Quarts.	Pints.	Gills.
Taunton,	5	–	1	–	–	47	2	1	–
Townsend,	1	1	–	–	–	1	2	–	–
Upton,	1	–	–	–	–	1	2	1	–
Uxbridge,	5	–	2	–	–	40	1	–	–
Wakefield,	8	19	2	–	–	101	1	–	2
Waltham,	21	18	3	–	–	390	3	–	–
Wareham,	1	–	2	1	–	100	–	–	–
Warren,	5	3	3	–	–	9	1	–	–
Webster,	1	–	–	–	–	73	–	–	–
Wellesley,	1	–	–	–	–	1	2	–	–
Wenham,	1	–	–	–	–	1	2	–	–
West Boylston,	3	5	2	1	–	39	1	–	–
Westford,	1	–	2	–	–	3	–	–	–
Westminster,	4	1	3	–	2	17	1	1	2
West Newbury,	1	–	1	–	–	–	–	–	–
Weymouth,	14	20	–	1	–	85	2	1	–
Whitman,	8	8	3	–	2	23	–	–	–
Williamsburg,	2	46	3	1	2	45	1	–	–
Williamstown,	1	–	3	1	–	–	–	–	–
Winchendon,	2	2	1	–	–	1	–	1	–
Woburn,	31	5	2	1	–	409	1	1	–
Worcester,	87	52	3	–	2	626	2	–	–
Wrentham,	1	2	3	–	–	11	–	–	–
Total,	1,473	1,415	2	1	–	16,120	2	–	–

Appropriations and Expenditures.

	Appropriations.	Expenditures.
Compensation of officers,	$73,975 00	$73,345 78
Travel,	23,300 00	20,036 39
Contingent,	2,000 00	1,992 85
	$99,275 00	$95,375 02
Amount expended less than appropriation,	. . .	3,899 98

Amount received through boiler inspection department, as fees for examination of engineers and inspection of boilers, and paid into the State treasury, ... $9,540 00

Digitized by Google

Conclusion.

This twentieth report, although seemingly burdened with details, is to some extent merely an abstract of the work performed by the district police during the year which it covers. In both the inspection and the detective departments the members of the force have shown intelligence, fidelity and scrupulous devotion to the interest of the State. I take great pleasure in recording my testimony in their behalf. It seems proper that I should again gratefully acknowledge my indebtedness to the law department of the State for its advice in the interpretation of statutes and otherwise for my guidance.

Respectfully submitted,

RUFUS R. WADE,
Chief Massachusetts District Police

Digitized by Google

Digitized by Google

INDEX.

	PAGE
Inspection department,	6
Law relating to the employment of children and provisions for their education,	7
Evils of the sweating system,	9
Deduction in wages of women and minors,	15
International Association of Factory Inspectors,	16
Enforcement of the laws in relation to fish and game,	17
District police patrol steamer "Lexington,"	18
Examination of engineers and firemen,	19
Operation of laws in relation to the inspection of boilers and examination of engineers,	20
Summary of inspection report,	21
Ventilation and sanitation of workshops, factories, school-houses and public buildings,	22
Ventilation practically considered,	25
Description of plans for heating and ventilating an eight-room school-house by Inspector John T. White,	27
Plan for an eight-room school building, showing combination of mechanical and gravity system of ventilation, by Inspector Joseph A. Moore,	29
Plans for heating and ventilating by Inspector Frederick W. Merriam,	31
Report of Inspector John T. White,	33
Report of Inspector Henry J. Bardwell,	37
Report of Inspector Joseph A. Moore,	42
Report of Inspector Edwin Y. Brown,	47
Report of Inspector Joseph M. Dyson,	50
Report of Inspector John E. Foulds,	53
Report of Inspector Warren S. Buxton,	59
Report of Inspector Ansel J. Cheney,	62
Report of Inspector Henry Splaine,	71
Report of Inspector Frederick W. Merriam,	76
Certificates issued,	78
Report of Inspector Charles E. Burfitt,	82
Report of Inspector Joseph Halstrick,	99
Report of Inspector Isaac S. Mullen,	107
Report of Inspector Malcolm Sillars,	113
Report of Inspector Louis F. F. Abbott,	126
Report of Inspector John F. Tierney,	133
Report of Inspector James R. Howes,	148

Digitized by Google

PAGE
Report of Inspector Edward B. Putnam, ... 159
Report of Inspector John J. Sheehan, ... 175
Report of Inspector Charles A. Dam, ... 191
Report of Inspector Frank C. Wasley, ... 200
Report of Inspectress Mary E. Halley, ... 217
Report of Inspectress Mary A. Nason, ... 224
Elevators inspected, ... 244
Recommendations, ... 258
Report of Inspector John E. Griffin, ... 261
Report of Inspector John H. Plunket, ... 270
Report of Inspector Thomas Hawley, ... 281
Description of apparatus for the examination of engineers and firemen, ... 283
Report of Inspector John McGrath, ... 291
Report of Inspector Everett B. Dyer, ... 307
Report of Inspector David H. Dyer, ... 324
Report of Inspector Louis Amell, ... 337
Report of Inspector Freeman H. Sanborn, ... 356
Report of Inspector Charles Ferguson, ... 369
Report of Inspector Sturgis C. Baxter, ... 375
Report of Inspector John H. Kazar, ... 388
Report of Inspector Joseph H. McNeill, ... 398
Report of accidents, ... 413
Detective department, ... 431
Roster of District Police, ... 443
Disposition of forfeited liquors, ... 444
Appropriations and expenditures, ... 448
Conclusion, ... 449

Digitized by Google

Digitized by Google

Digitized by Google